RESEARCH MIV
Modified Integrated Vehicle

VOLKSWAGENWERK
Aktiengesellschaft
WOLFSBURG

Contract No. DTNH 22-81-C-17085

Final Report
Volume I
September 1983

PREPARED FOR:
U. S. DEPARTMENT OF TRANSPORTATION
NATIONAL HIGHWAY TRAFFIC SAFETY ADMINISTRATION
WASHINGTON, D. C. 20590

PREPARED FOR THE DEPARTMENT OF TRANSPORTATION, NATIONAL HIGHWAY TRAFFIC SAFETY ADMINISTRATION UNDER CONTRACT NO.

DTNH 22-81-C-17085

THE OPINIONS, FINDINGS, AND CONCLUSIONS EXPRESSED IN THIS PUBLICATION ARE NOT NECESSARILY THOSE OF THE

NATIONAL HIGHWAY TRAFFIC SAFETY ADMINISTRATION

Technical Report Documentation Page

1. Report No.

2. Government Accession No.

3. Recipient's Catalog No.

4. Title and Subtitle

Research MIV
Modified Integrated Vehicle

5. Report Date September 1983

6. Performing Organization Code

7. Author(s) Dr. U. Seiffert
Volkswagenwerk AG - Research Division

8. Performing Organization Report No.

9. Performing Organization Name and Address

Volkswagenwerk AG
Research & Development Division
3180 Wolfsburg/W. Germany

10. Work Unit No. (TRAIS)

11. Contract or Grant No. DTNH 22-81-C-17085

12. Sponsoring Agency Name and Address

U.S. Department of Transportation
National Highway Traffic Safety Administration
Washigton, D.C. 20590

13. Type of Report and Period Covered

Final Report
January 1981-September 1983

14. Sponsoring Agency Code

15. Supplementary Notes

16. Abstract

The program objectives, performance specifications, test configurations and test devices, MIV structures and components, vehicle and dummy response data from side impact tests

- Crabbed Barrier/4 door baseline vehicle at 60°
  - Test 1 : v = 30 mph
  - Test 2 : v = 30 mph
  - Test 3 : v = 35 mph
  - Test 4: v = 40 mph
  - Test 6: v = 40 mph
- Crabbed Barrier/4 door MIV and MIV components at 60°
  - Test 5 : v = 30 mph MIV
  - Test 7 : v = 30 mph 4 door baseline vehicle with MIV padding
  - Test 8 : v = 30 mph MIV without MIV padding
- Crabbed Chevrolet Citation / 4 door baseline vehicle at 60° and 90°
  - Test 9 : v = 40 mph
  - Test 10: v = 34 mph
- Crabbed Chevrolet Citation / 4 door MIV at 60° and 90°
  - Test 11: v = 40 mph
  - Test 12: v = 34 mph
- Crabbed Chevrolet Citation / 4 door baseline vehicle at 90°
  - Test 13: v = 34 mph with bumper / sill engagement,

and data from the head-on fixed barrier impact with the MIV at 35 mph, as well as the results of the qualitative side impact computer analysis are summarized in this report.

17. Key Words

18. Distribution Statement

19. Security Classif. (of this report)

20. Security Classif. (of this page)

21. No. of Pages 124

22. Price

Form DOT F 1700.7 (8-72)

Reproduction of completed page authorized

THE TEST RESULTS RELATE SOLELY TO THE SPECIFIED NHTSA TEST CONFIGURATIONS FOR SIDE IMPACTS WITH THE CRABBED CHEVROLET CITATION AND THE NEW TEST DEVICES, DEFORMABLE CRABBED BARRIER AND HSRI SIDE IMPACT DUMMY (SID) BOTH OF WHICH ARE CURRENTLY UNDER DEVELOPMENT

NHTSA PROJECT DTNH 22-81-C-17085

Preface

The report summarizes the work of Volkswagenwerk AG in the MIV (Modified Integrated Vehicle) Research Project of the U.S. Department of Transportation, National Highway Traffic Safety Administration.

Within the framework of the MIV Project Volkswagenwerk was requested by NHTSA to develop concepts and structures which would harmonize conflicting design considerations - the greatest possible reduction in dummy loadings with the lowest possible vehicle weight increase - under the precondition that the design be suited to current mass production methods. The 4 door Volkswagen Rabbit was to serve as the basis of the study.

The report contains the program objectives, performance specifications relating to test configuration and test devices, as well as vehicle und dummy response data from lateral and frontal impacts. It depicts the MIV structure and components to further increase so-called "passive safety." It also contains the qualitative analysis by computer simulation of striking vehicle parameters on dummy loadings.

FINAL REPORT

RESEARCH MIV
MODIFIED INTEGRATED VEHICLE

TABLE OF CONTENTS

Volume I

Table of Contents

List of Illistrations and Tables

1. Introduction

The objective of the MIV project was to optimize two contradictory design considerations - the greatest possible reduction in dummy loadings at the lowest possible vehicle weight increase (max. increase 20 lbs./ vehicle) with the precondition that the design be suited to mass production.

The MIV is by definition not a totally integrated concept as dicussed and presented by Volkswagenwerk AG during the 8th ESV Conference or as demonstrated in the form of the Volkswagen Integrated Research Vehicles IRVW I and II. The MIV, in contrast, does not include consideration of special energy saving or special emission reduction engine/transmission concepts.

Because vehicle layout, according to established criteria and subsequent reinforcement for modified design criteria, always leads to substantial weight increases with commensurate limitations upon producebility, it was decided not to use the "add-on" strategy, but to develop an all new "Integrated Structure" for the 4 door MIV. This concept requires that the largest possible number of components be effective during the specified frontal and lateral impacts.

NHTSA's design goals were the 35 mph frontal fixed barrier impact and the 30 mph side impact with the new 1.565 kg (3,450 lbs) deformable 19^{o} Crabbed Barrier and the new HSRI Dummy which were specially developed for the side impact.

In addition to these tests, the effectiveness of the MIV vehicle layout was to be evaluated in vehicle - to - vehicle lateral impacts with the crabbed Chevrolet Citation striking the side of the MIV at 60° and 90° at 40 and 34 mph respectively.

A qualitative analysis of the force/deflection characteristics of front structure, mass and bumper height of the striking vehicle and their effect upon dummy loadings and side structure deformation of the struck vehicle was to be performed by computer simulation. To validate the computer program a 90° side impact test was to be run with the crabbed Citation and baseline vehicle at 34 mph simulating the bumper/sill engagement.

2. Statement of Work

Vehicle engineering measures for the increased passive safety requirements specified in the project were to be derived from the results of baseline tests as well as from the know-how gained in the ESVW I, ESVW II, RSVW, IRVW I and II projects. The effects of these measures were to be examined in tests defined by NHTSA:

- 19° Crabbed Barrier/MIV
  60° side impact at 30 mph impact velocity

- MIV head-on fixed barrier impact
  at 35 mph impact velocity

The NHTSA goals mandate the development of new technology in conjunction with new test configurations and devices for lateral and frontal impacts

- for greatest possible reduction in dummy loads
- lowest possible weight increase
- consistent with current mass production methods.

Initially serveral baseline side impact tests with unmodified vehicles were to be performed to form the basis for modifications to be derived to meet requirements for increased passive safety in the impact configuration defined in the MIV project, Phase I. In addition the baseline tests were intended to permit assessment of the dependency of dummy loadings and vehicle deformation upon impact velocity (30, 35 and 40 mph), and to determine the scatter of dummy loadings under identical test conditions.

The new HSRI Side Impact Dummy and the newly developed Crabbed Barrier (Figure 1, 2 and 3) were used. The deformable moving barrier was crabbed at an angle of 19 degrees. The impact is intended to simulate a 60 degree car-to-car side impact in which the velocity of the striking vehicle is twice that of the struck vehicle.

The MIV project was divided in Phase I and II. The objective of Phase II was to investigate the effectiveness of MIV measures with different test configurations, test parameters and a striking vehicle (crabbed Citation with modified suspension).

Instead of the crabbed barrier, in the Phase II work, crabbed Chevrolet Citations were used as striking vehicles. In addition to this change, the impact point moved forward and the impact angle was not only 60 but also 90 degree (Figures 4, 4 A and B).

In Phase II four vehicle-to-vehicle side crash tests were to be performed.

- 19° crabbed Citation/baseline vehicle
  60° side impact at 40 mph impact velocity
- the same test parameters with the MIV
- 27° crabbed Citation/baseline vehicle
  90° side impact at 34 mph impact velocity
- the same test parameters with the MIV.

These tests are said to simulate a 30 mph moving striking vehicle and a 15 mph moving struck vehicle. In this case the test velocities for the 19 and 27 degree crabbed Citation at an impact of 60 and 90 degrees were 40 and 34 mph respectively. The Citations were to be ballasted to a test weight of 3,450 lbs.

In Phase II the production oriented designs of the MIV developed in Phase I were to be used, with the exception of the interior padding, which was developed by Calspan and was to be supplied by NHTSA. The shape was developed by Calspan after analysis the arm movement of different drivers during vehicle operation. Impairment of vehicle operability and reduction of comfort has not been investigated. Furthermore the influence of the following parameters on dummy loadings were to be qualitatively analysed by computer simulation in Phase II:

- the force/deflection characteristics of the front structure
- the curb weight and load as well as
- the bumper height in conjunction with the height of the longitudinal frame member of the striking vehicle.

HSRI SIDE IMPACT DUMMY SID

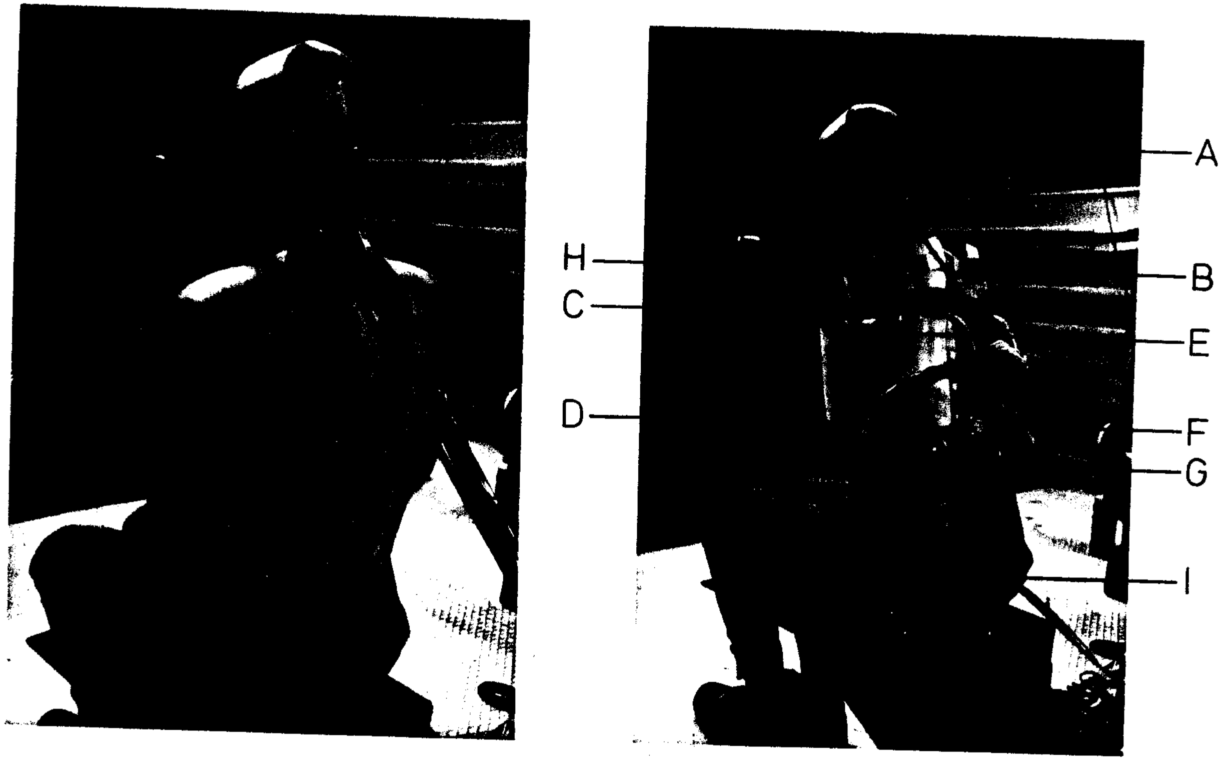

A. HEAD TRIAXIAL
B. UPPER THORAX (T1), TRIAXIAL
C. UPPER STERNUM, LONGITUDINAL
D. LOWER STERNUM, LONGITUDINAL
E. LEFT AND RIGHT UPPER RIB, LATERAL
F. LOWER THORAX (T12), TRIAXIAL
G. LEFT AND RIGHT LOWER RIB, LATERAL
H. DISPLACEMENT TRANSDUCER
I. PELVIS,TRIAXIAL

LOCATION OF 18 ACCELEROMETERS

RESEARCH MIV
MODIFIED INTEGRATED VEHICLE

FIG.1

SIDE IMPACT TEST CONFIGURATION
POINT OF INITIAL CONTACT

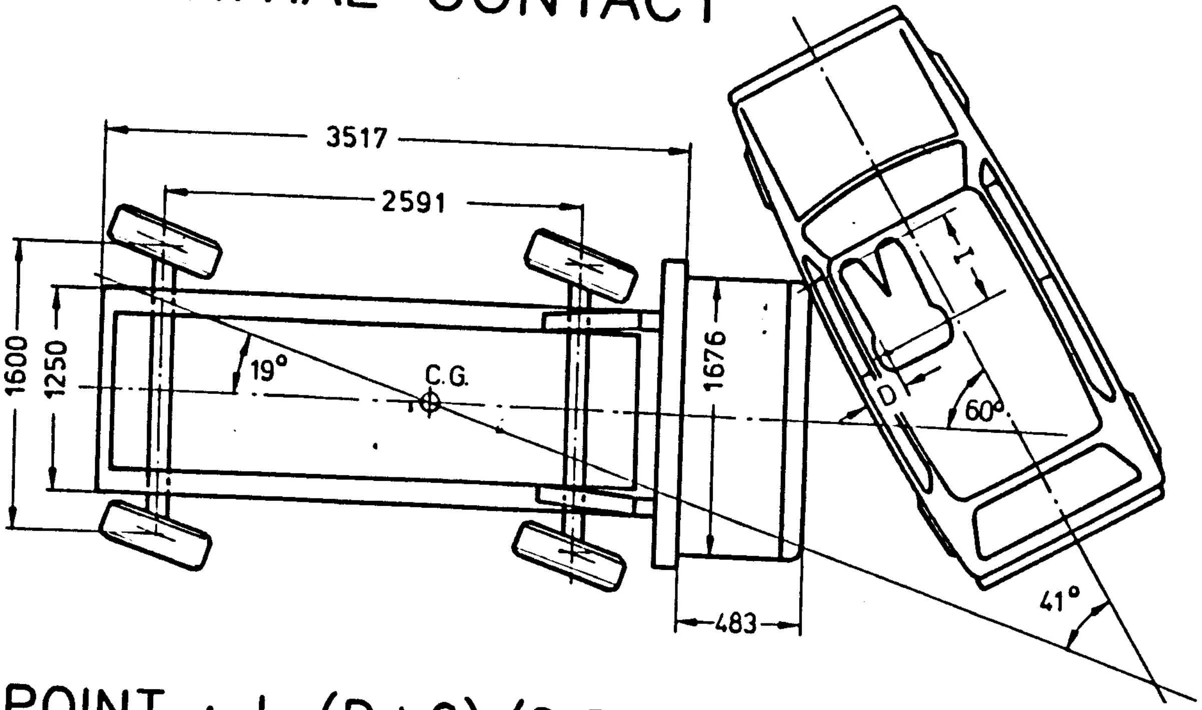

IMPACT POINT : I=(D+6)/0.8693+1.5 (IN)

RESEARCH MIV
MODIFIED INTEGRATED VEHICLE

FIG.3

NHTSA Project
MIV

Test Configurations

	Phase I 60°/ 19° Crabbed	Phase II 60°/ 19° Crabbed	 90°/ 27° Crabbed
	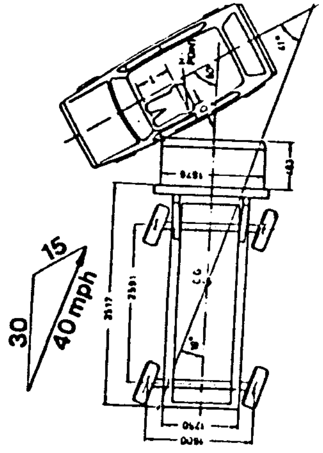	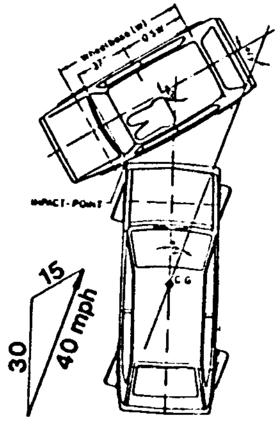	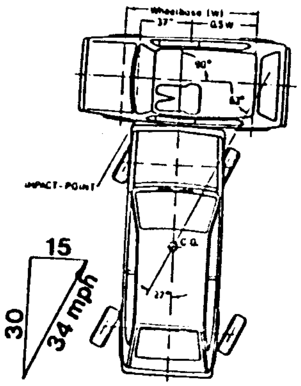
Bullet Vehicle	**Crabbed Barrier**	**Crabbed Citation**	
Imp. P. fr. Front Wheel	**650 mm**	**260 mm**	
Impact Velocity (mph)	**40**	**40**	**34**
Simul. " v_B / v_T	**30 / 15**		
Mass m_B / m_T (kg)	**1565 / 1200**		

RESEARCH MIV

MODIFIED INTEGRATED VEHICLE

FIG. 4

SIDE IMPACT TEST CONFIGURATION

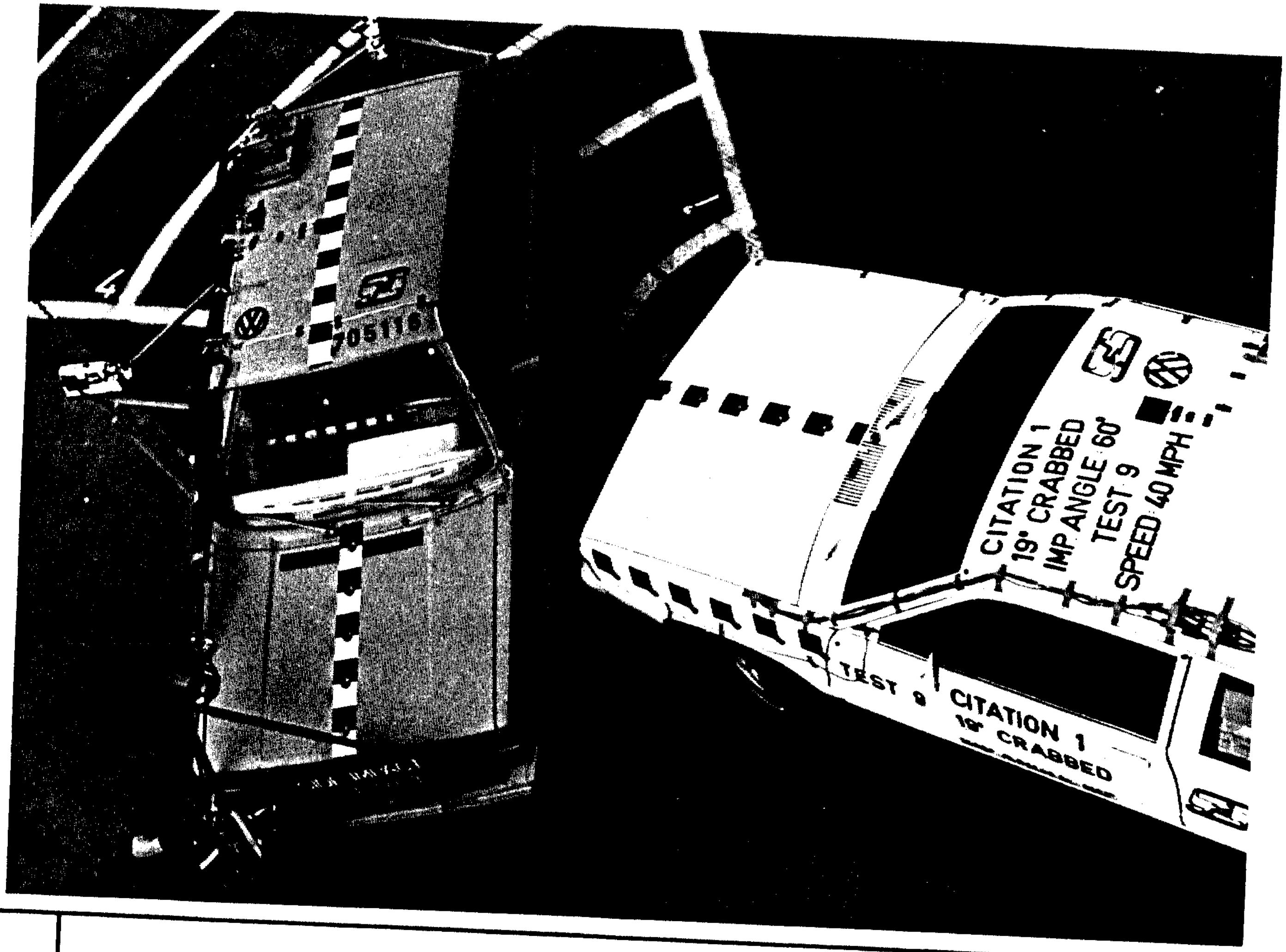

RESEARCH MIV
MODIFIED INTEGRATED VEHICLE

FIG.4A

SIDE IMPACT TEST CONFIGURATION

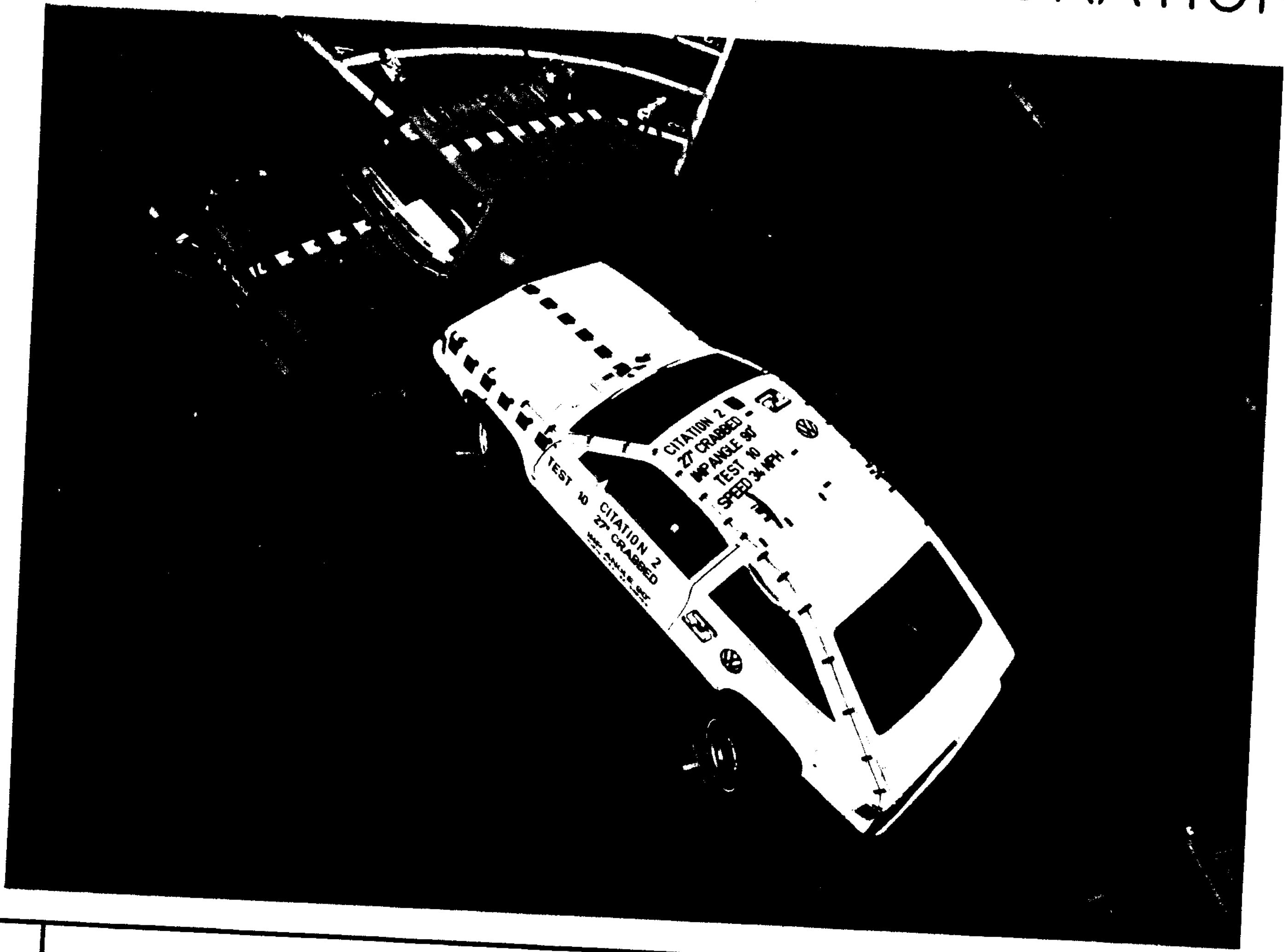

RESEARCH MIV
MODIFIED INTEGRATED VEHICLE

FIG.4B

3. Test Parameters and Tests Performed

3.1 Test Parameters

In Phase I all tests were run under the following conditions as specified by NHTSA:

- Side Impact:

  Striking vehicle: simulated by the deformable Crabbed Barrier
  Struck vehicle: 4-door VW Rabbit or MIV
  Impact point: $I = (D + 6) / 0.8693 + 1.5$ (in)
  Impact angle: 60°
  Ground clearance: 11 in
  Dummies: two 50 % male HSRI dummies as delivered by NHTSA, at the impacted side, front and rear seating positions

  Protection criteria for the HSRI Side Impact Dummy were specified by NHTSA as: "Volkswagen shall use measures so that the largest possible reduction in dummy loads is achieved."

- Frontal Impact:

  Impact speed: 35 mph
  Impact angle: 0°
  Dummies: two 50 % male Hybrid II on the front seats
  Protection criteria: FMVSS 208

The test parameters in Phase II for the side impacts are (Figure 4):

Striking vehicle: crabbed Chevrolet Citation
Struck vehicle: see Phase I
Impact point: 37" forward of wheelbase center
Impact angle: 60° and 90°
Dummies: see Phase I

These new test conditions resulted from a review by NHTSA of the completed National Crash Severity Study (NCSS) accident file.

3.2 Tests Performed

In Phase I the following side impact tests were conducted:

- Baseline Side Impact Tests with Baseline Vehicles

Test 1		30		
Test 2		30		
Test 3	v=	35	mph;	impact angle : 60°
Test 4		40		crabbed angle : 19°
Test 6		40		

- Side Impact Tests with 4 Door MIV

Test 5		30		
Test 7	v=	30	mph;	impact angle : 60°
Test 8		30		crabbed angle : 19°

Test 5: Side impact with the new MIV "Integrated Structure" developed in this project and the MIV padding.

Test 7: Side impact with MIV padding only.

Test 8: Side impact with MIV "Integrated Structure" only.

The following tests were conducted in Phase II

- Baseline Side Impact Tests with Baseline Vehicles

$$\begin{array}{l}\text{Test 9}\\ \\ \text{Test 10}\end{array}\quad v=\left|\begin{matrix}40\\ \\ 34\end{matrix}\right| \text{ mph; impact angle : }\left|\begin{matrix}60^{\circ}\\ \\ 90^{\circ}\end{matrix}\right|,\text{ crab.angle: }\left|\begin{matrix}19^{\circ}\\ \\ 27^{\circ}\end{matrix}\right|$$

- Side Impact Tests with 4 Door MIV

$$\begin{array}{l}\text{Test 11}\\ \\ \text{Test 12}\end{array}\quad v=\left|\begin{matrix}40\\ \\ 34\end{matrix}\right| \text{ mph; impact angle : }\left|\begin{matrix}60^{\circ}\\ \\ 90^{\circ}\end{matrix}\right|;\text{ crab.angle: }\left|\begin{matrix}19^{\circ}\\ \\ 27^{\circ}\end{matrix}\right|$$

NHTSA believes that these test parameters constitute a life-threatening environment.

- Side Impact Test with Bumper/Sill Engagement
  Test 13

  v= 34 mph; impact angle : 90°; crab.angle: 27°

3.3 Phase I Baseline Tests

Baseline side impact tests were conducted for the following reasons:

a) to derive modifications for the increased passive safety requirements specified by NHTSA in this project

b) to determine the scatter of dummy loadings and vehicle deformation under identical test conditions

c) to evaluate the dependency of dummy loadings and vehicle deformation upon different impact velocities.

3.3.1 Derivation of MIV Components

Analysis of the baseline tests led to the development of the MIV for increased passive safety requirements in specified side impacts.

3.3.2 Scatter Determination

For scatter determination, tests 1 and 2 were performed at 30 mph, and tests 4 and 6 at 40 mph. The scatter for driver dummy loadings is shown in Figures 5 and 6. The transformation of mechanical parameters to medical AIS values (Table 4 to 16, Paragraph 6.) is described and discussed in the paper of R.H.Eppinger, R.M. Morgan and J.H. Marcus "Side Impact Data Analysis" presented at the 9th ESV Conference in 1982.

The transformation algorithm is still under development. In a comparison of tests 1 and 2, the chest damper, modified by NHTSA, probably caused the greater portion of the scatter. In tests 4 and 6 the scatter was probably caused by the deformation element of the crabbed Barrier. In test 4 the element had slight exterior cracks.

BASELINE SIDE IMPACT TESTS 1, 2, 4 AND 6

SCATTER DETERMINATION

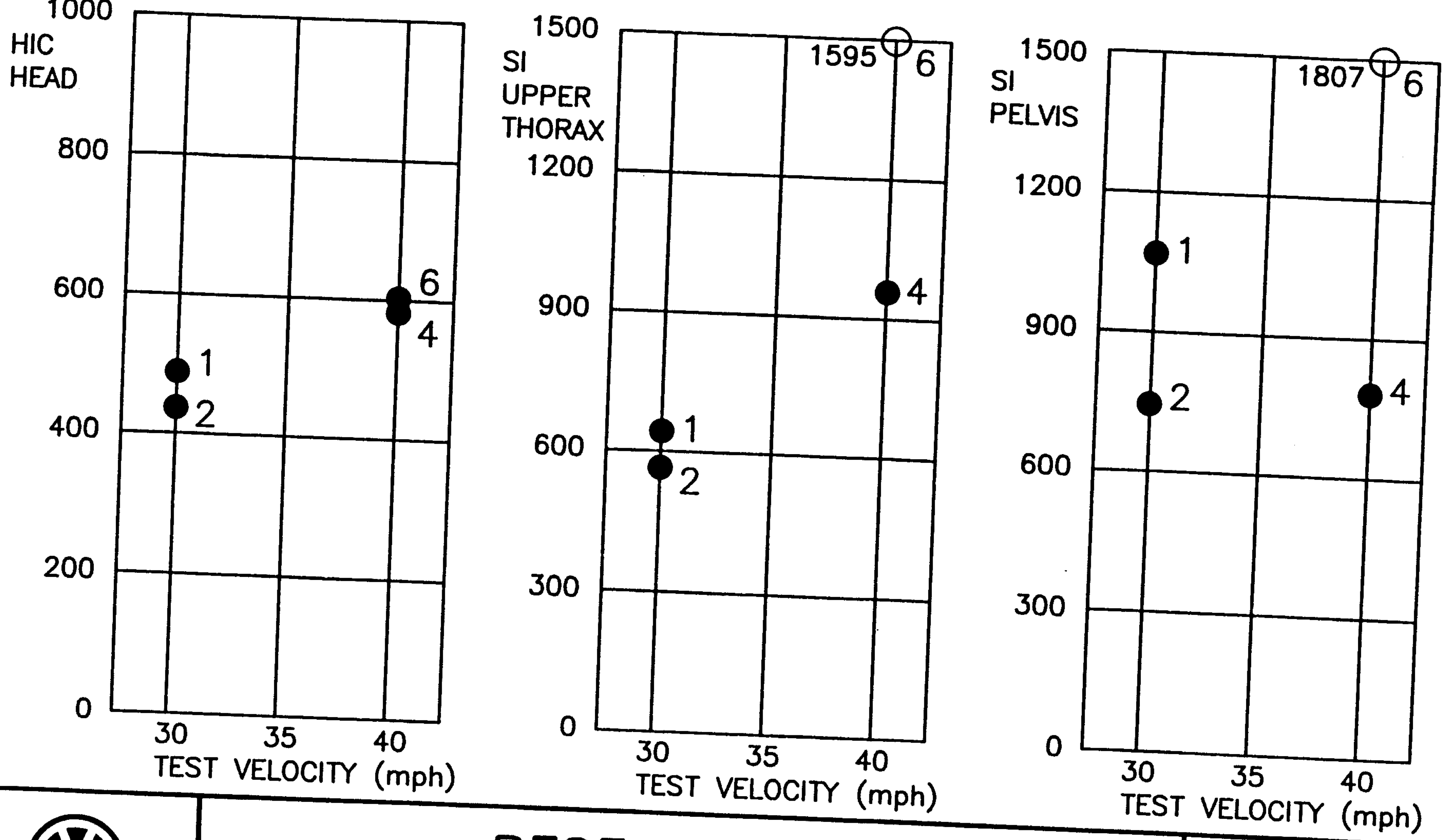

RESEARCH MIV

MODIFIED INTEGRATED VEHICLE

FIG. 5

BASELINE SIDE IMPACT TESTS 1, 2, 4 AND 6

SCATTER DETERMINATION

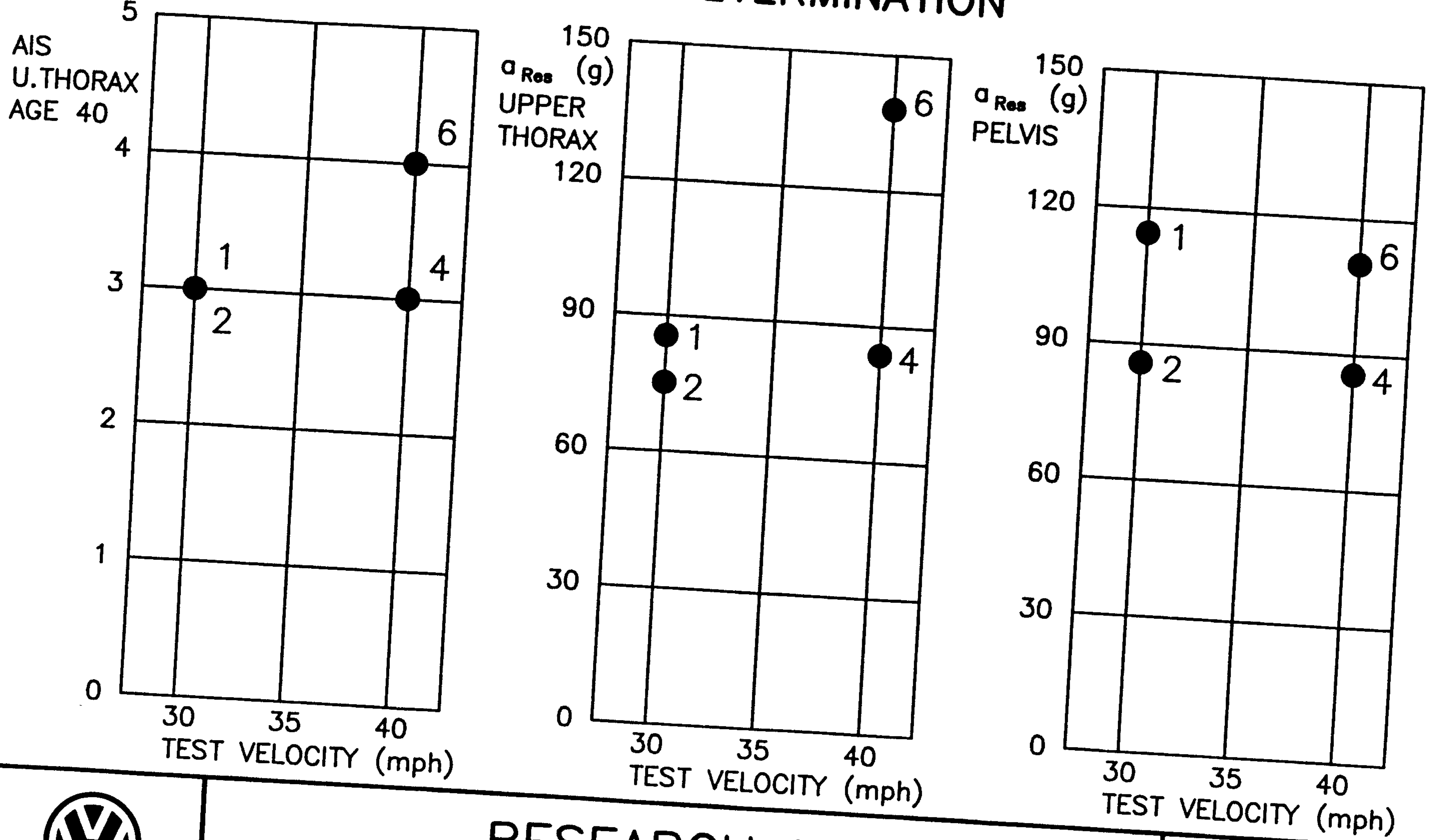

RESEARCH MIV

MODIFIED INTEGRATED VEHICLE

FIG. 6

3.3.3 Dummy Loading as a Function of the Impact Velocity

The test results show that there is an increase in dummy loads with increasing impact velocity. But this tendency is only evident, if the dummy accelerations from test 2, 3 and 6 are compared, Figure 7.

3.4 Phase II Baseline Tests

The baseline tests of Phase II are intended to establish a basis for the evaluation of the effectiveness of the Phase I MIV components according to the new Phase II test configurations and test parameters specified by NHTSA.

BASELINE SIDE IMPACT TESTS 1,2,3,4 AND 6
DEPENDENCY DUMMY LOADS AND IMPACT VELOCITY

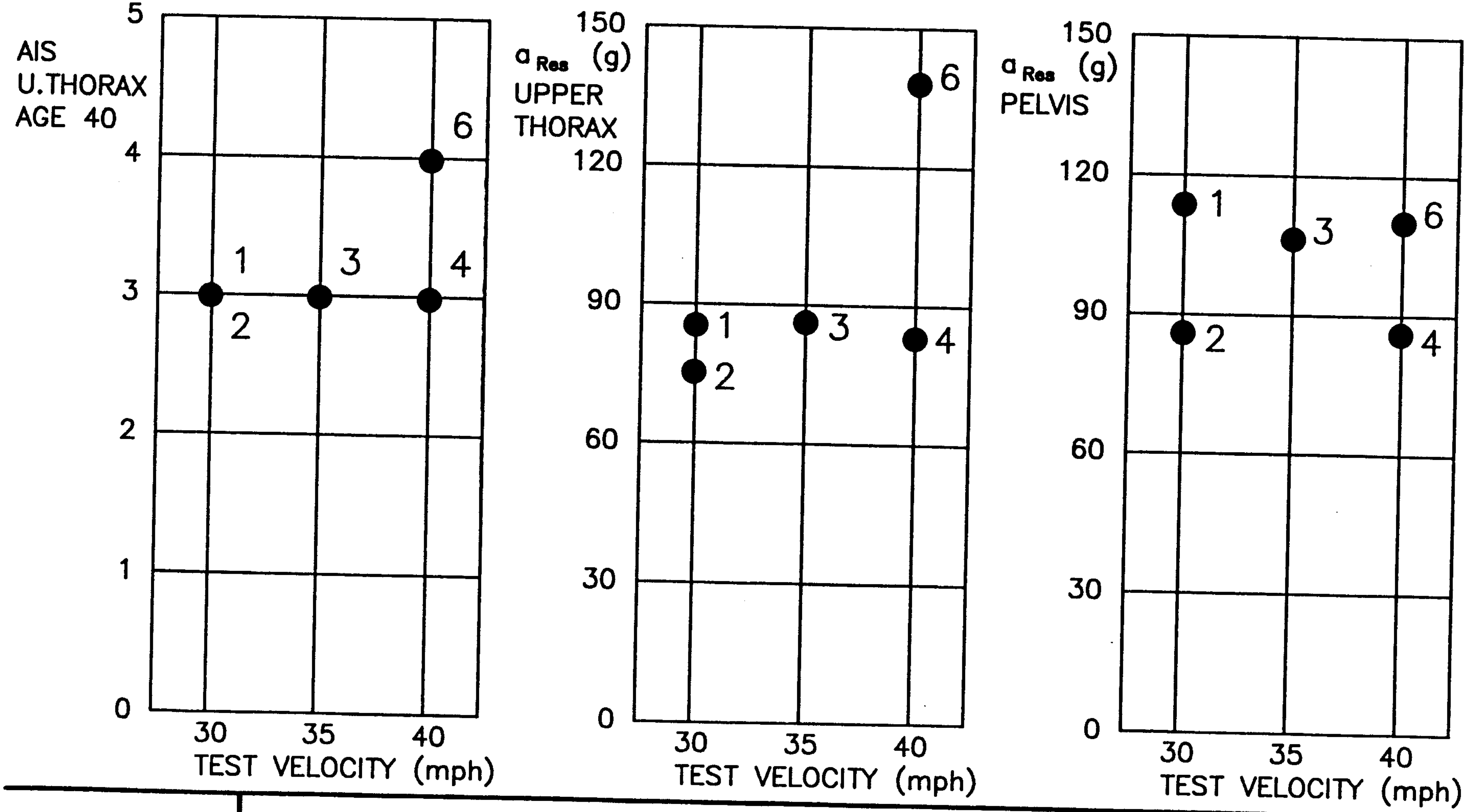

RESEARCH MIV
MODIFIED INTEGRATED VEHICLE

FIG. 7

4. VW Study for Compliance with the Phase I MIV Requirements in Specified Lateral and Frontal Impacts

The NHTSA goal to achieve the greatest possible reduction in dummy loads, in keeping with the objective of lowest weight increase together with the prerequisite that the design be suited to mass production, required the development of a new "Integrated Structure" for the MIV. This concept requires that the greatest number of components be effective during frontal and lateral impacts. Furthermore, consistent with the NHTSA goals, the methodology for the integrated design selected was characterized by straight load path through the MIV structure in an effort to avoid moments of flexion to the extent possible.

The "Integrated Structure" approach involving total redesign, rather than the less effective strategy utilizing add-on parts, is necessary to achieve the goals established by NHTSA.

The MIV Integrated Structure (Figure 8) was developed in conjunction with the combination of test configurations and test devices specified by NHTSA in Phase I of this project. Figures 9 and 10 depict the structural components.

MIV STRUCTURE

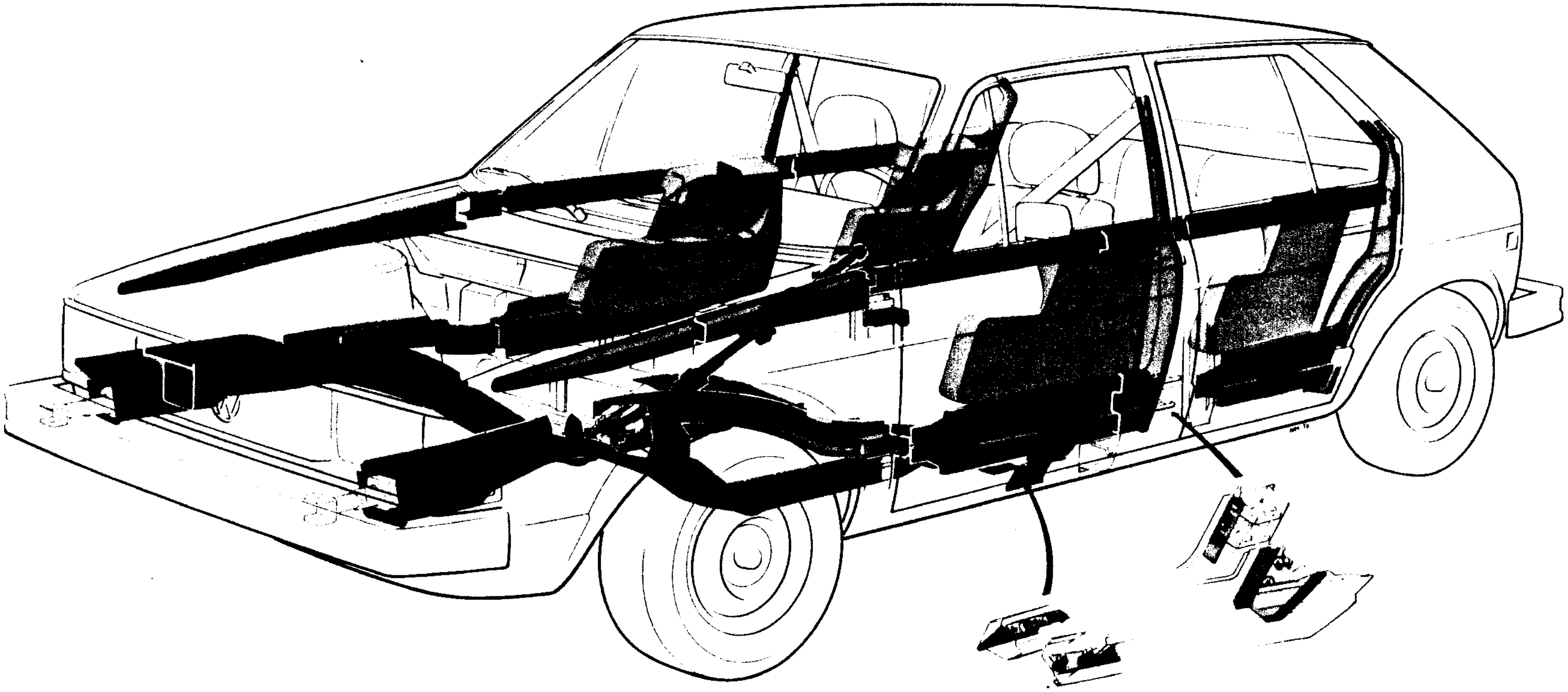

RESEARCH MIV
MODIFIED INTEGRATED VEHICLE

FIG.8

MIV STRUCTURAL COMPONENTS

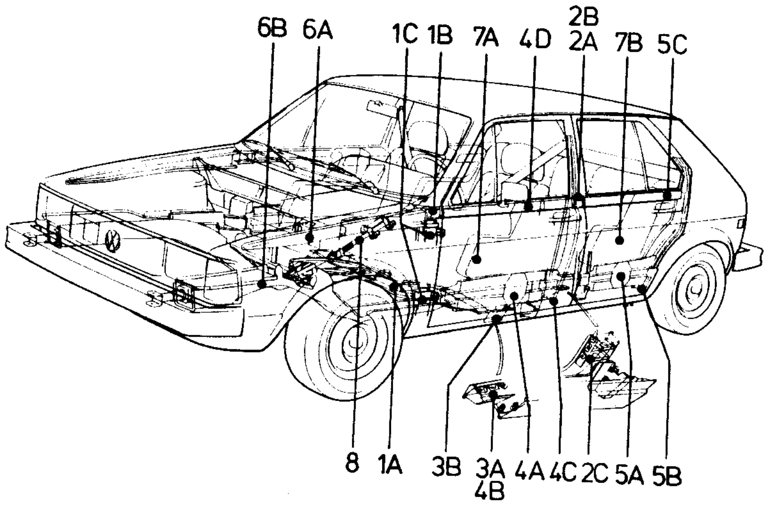

(1) A – PILLAR
1A WHEELHOUSE BEAM
1B A–PILLAR BRACE
1C HINGE TO A–PILLAR ATTACHMENT PLATE

(2) B – PILLAR
2A WINDOW BEAM SUP.
2B B–PILLAR BRACE
2C DOOR TO B–PILLAR ATTACHMENT

(3) SILL BEAM
3A DOOR BEAM AND SIDE SILL INTERLOCK
3B SIDE SILL BRACING PLATE

(4) FRONT DOOR
4A DOOR BEAM
4B DOOR BEAM INTERLOCK
4C DOOR LOCK MOUNTING
4D SIDE WINDOW BEAM

(5) REAR DOOR
5A DOOR BEAM
5B DOOR LOCK MOUNTING
5C SIDE WINDOW BEAM

(6) FRONT STRUCTURE
6A UPPER BEAM
6B LONGITUDINAL BEAM

(7) DOOR PADDING
7A FRONT DOOR PADDING
7B REAR DOOR PADDING

(8) STEERING SYSTEM

RESEARCH MIV
MODIFIED INTEGRATED VEHICLE

FIG. 9

DESIGN DRAFT OF MIV COMPONENTS

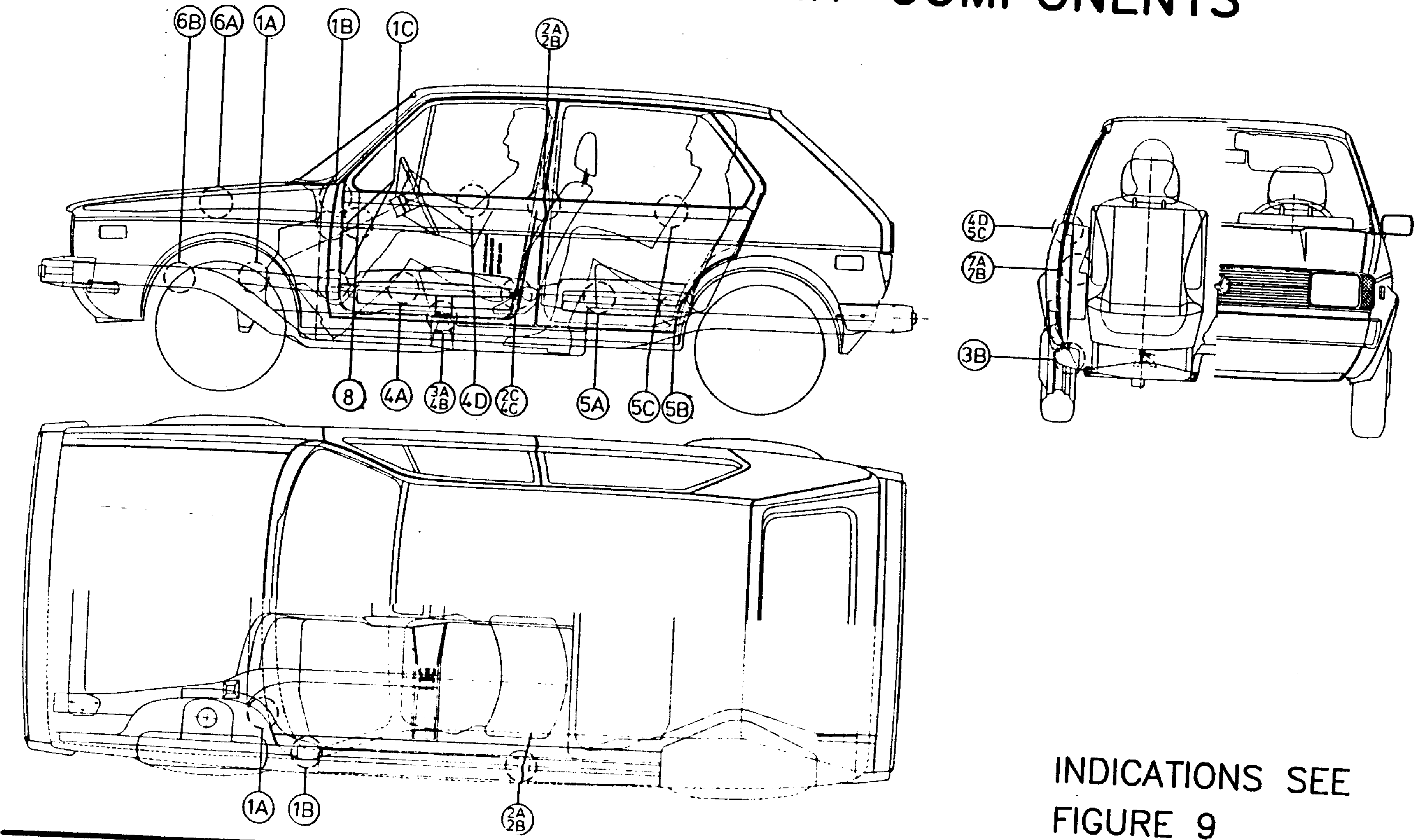

INDICATIONS SEE
FIGURE 9

RESEARCH MIV

MODIFIED INTEGRATED VEHICLE

FIG.10

In Phase I VW selected a polyurethane foam for the modified padding with the density of 43 kg/m^3 and a compression stress value of 334 kPa. The padding thickness in the thoracic and pelvic area is 70 mm. It was selected and installed under considerations of technical feasibility. It was not quantitatively assessed for comfort and impairment of vehicle operability but appears to represent a reduction of existing levels because of contact by the 95 % male dummy.

The MIV padding in Phase II was supplied by NHTSA. It has nearly the same density, 45 kg/m^3, but a lower compression stress, 161 kPa. This padding was developed by Calspan. The shape corresponds with Calspan film analysis of the arm movement of different drivers during vehicle operation. The thickness in the thoracic area is 75 mm and in the pelvic area 90 mm. The impairment with vehicle operability and reduction of comfort has not been evaluated. Figure 11 shows the two force/deflection characteristics measured in quasi static compression tests with 70 x 70 x 30 mm foam blocks.

F/D CHARACTERISTICS OF VW AND CALSPAN PADDING

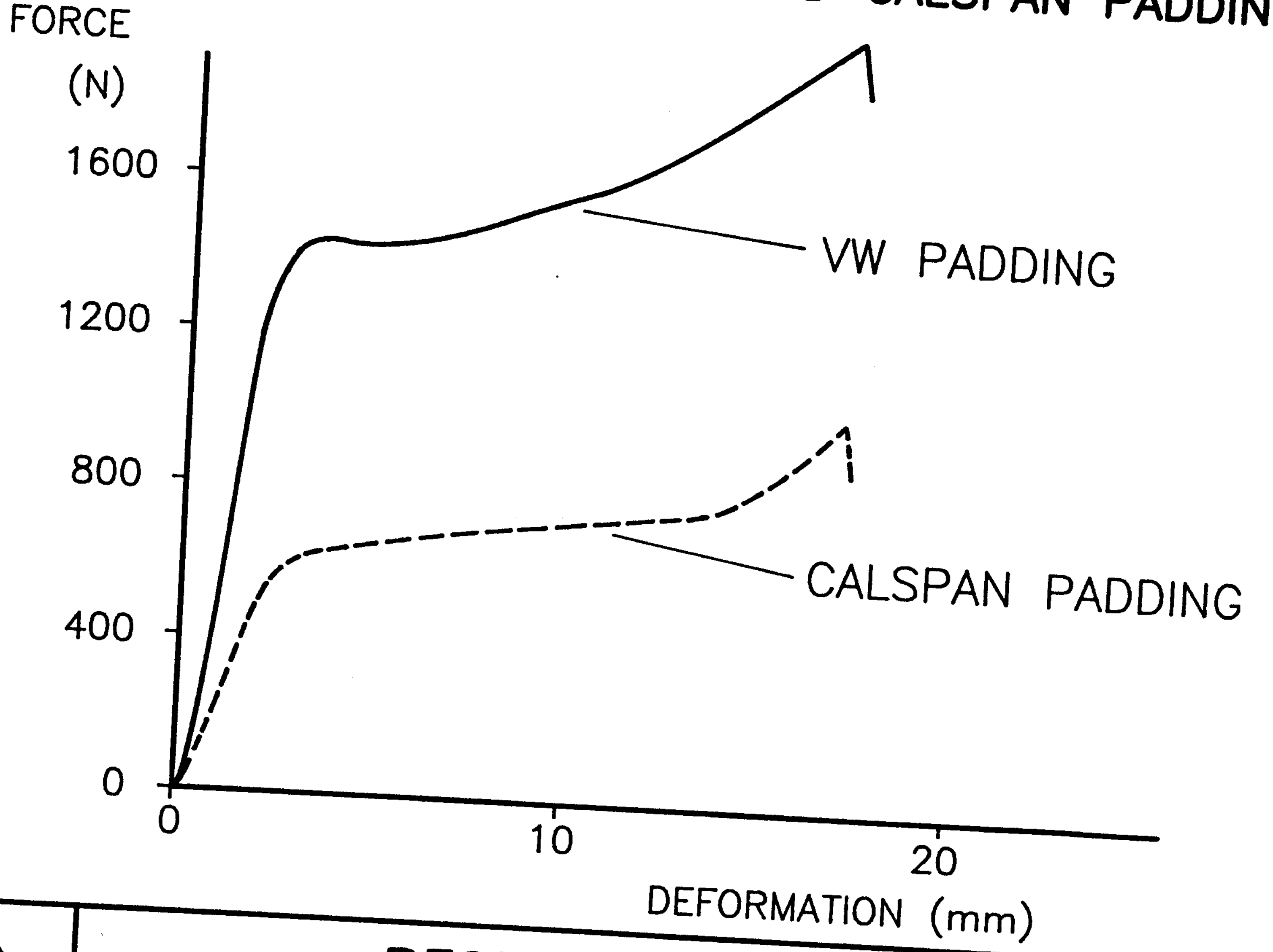

RESEARCH MIV

MODIFIED INTEGRATED VEHICLE

FIG. 11

5. Tests with MIV Vehicles and Components

5.1 Phase I Side Impacts

5.1.1 Side Impact with MIV

The side impact (test 5) with the MIV incorporating the new "Integrated Structure" and MIV side padding demonstrated a promising potential for reductions in dummy loading (Figure 12), for the head, left upper (LUR), left lower (LLR) rib, as well as the upper (T1) and lower (T12) thorax and pelvis. Structural deformation was also reduced (Figure 13).

The reduction in dummy loadings cannot be reliably attributed or assigned to individual MIV components because dummy loadings are dependent upon test parameters and many other factors including but not limited to:

- force/deflection characteristics of the front structure of the striking car
- force/deflection characteristics of the side structure of the struck car
- force/deflection characteristics and dimensions of padding, and
- free space between the dummy and the padding.

The demonstrated reduction in dummy loading with the relatively low overall weight increase confirms that an integrated approach is the only appropriate manner to deal with contradictory considerations of increased levels of passive safety and low weight increase consistent with current mass production methods. The extent to which this potential can actually be realized will depend, in part, upon the performance of MIV structures in defined side impacts when struck by the stiffer MIV frontal structures developed for the 35 frontal fixed barrier impact.

5.1.2 Side Impact with MIV Door Padding Only

The objective of test 7 was to evaluate the potential for reduction of dummy loads using only the same door padding as used in test 5 but without MIV structural components. The reduction of dummy loadings is shown in Figure 14. The greater reduction of dummy loads using the "Integrated Structure" and the MIV door padding is apparent (Figure 15). The influence of the MIV structure on the reduction of dummy loads is evidenced by the difference between dummy loads of the MIV and the baseline vehicle with the "padding only" modification.

5.1.3 Side Impact with MIV Integrated Structure Only

The purpose of test 8 was to determine the effect of the "Integrated Structure" without MIV padding on dummy loads. Figure 16 shows the reduction of upper thoracic and pelvic accelerations and Figure 17 the difference of dummy loads between MIV with MIV padding, and MIV "Integrated Structure" alone.

5.1.4 Comparison of Test Results

Comparison of the side impact tests 2, 5, 7 and 8 at the same test velocity with baseline vehicle, MIV vehicles and components clearly demonstrates that the best overall results in reduction of dummy loads were achieved with the combination of MIV structure and MIV padding.

In general, MIV padding will be less effective than the newly developed "Integrated Structure", it also decreases occupant comfort and interferes with vehicle operability.

Reduction of the thickness of the padding for occupant comfort and non-impairment of vehicle operability will reduce the effectiveness of the "padding only modification."

Widening the MIV by 140 mm for improved comfort and no impairment of vehicle operability in order to compensate for the 70 mm door padding would, however, probably further increase dummy loadings. In wider vehicles occupant loading may be higher because of the greater distance between dummy and padding. This hypothesis would have to be tested in appropriate vehicular impacts.

Widening the MIV would also result in a fuel consumption and retail price increases in addition to other potentially detrimental side-effects.

SIDE IMPACT TESTS 2 AND 5

DUMMY DRIVER LOADS AT 30 MPH

TEST 2: ■ 60°,19° CRABBED BARRIER/BASELINE VEHICLE

TEST 5: ☐ 60°,19° CRABBED BARRIER/MIV

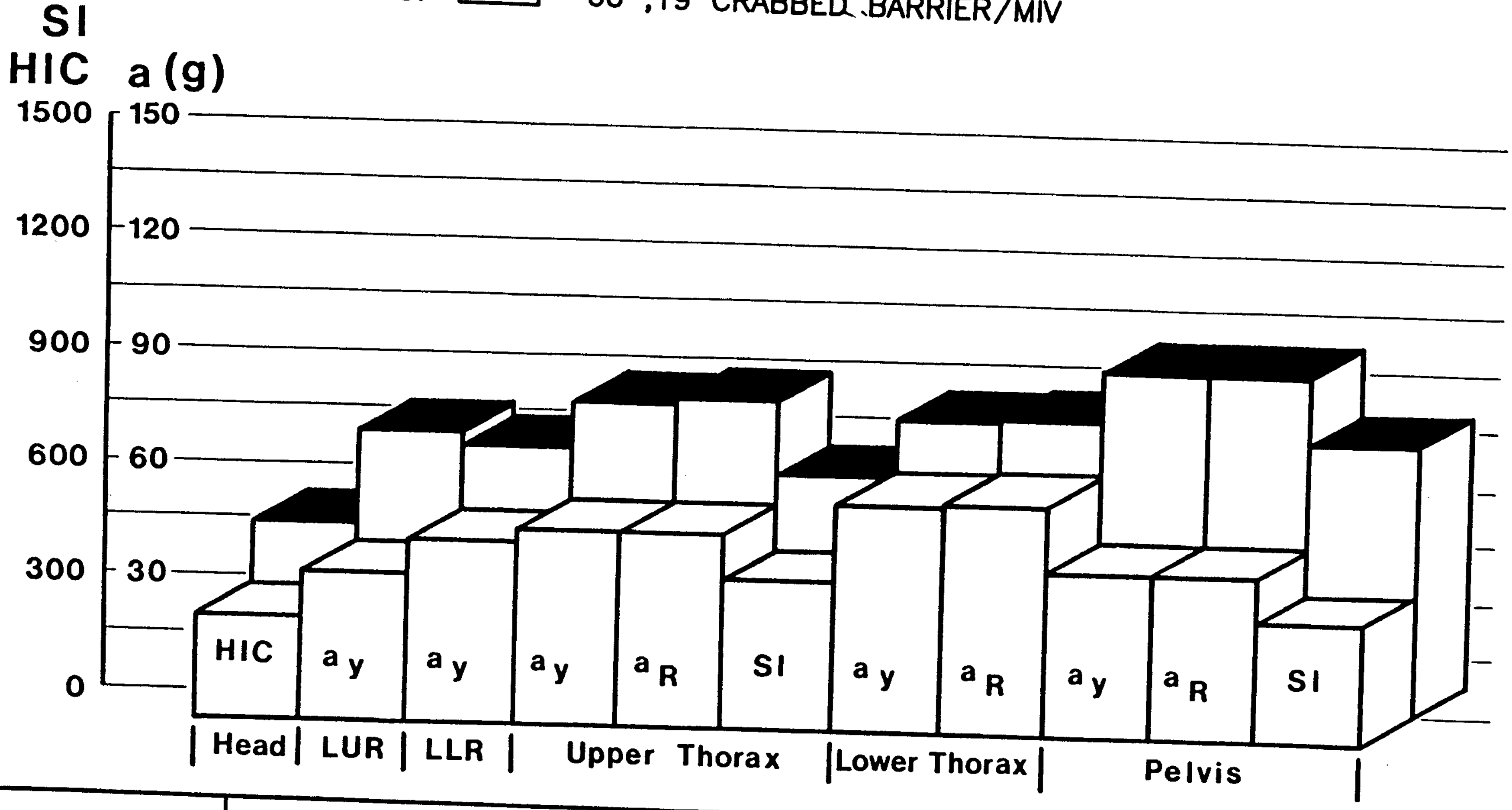

RESEARCH MIV

MODIFIED INTEGRATED VEHICLE

FIG. 12

SIDE IMPACT
COMPARISON OF TEST 2 AND 5

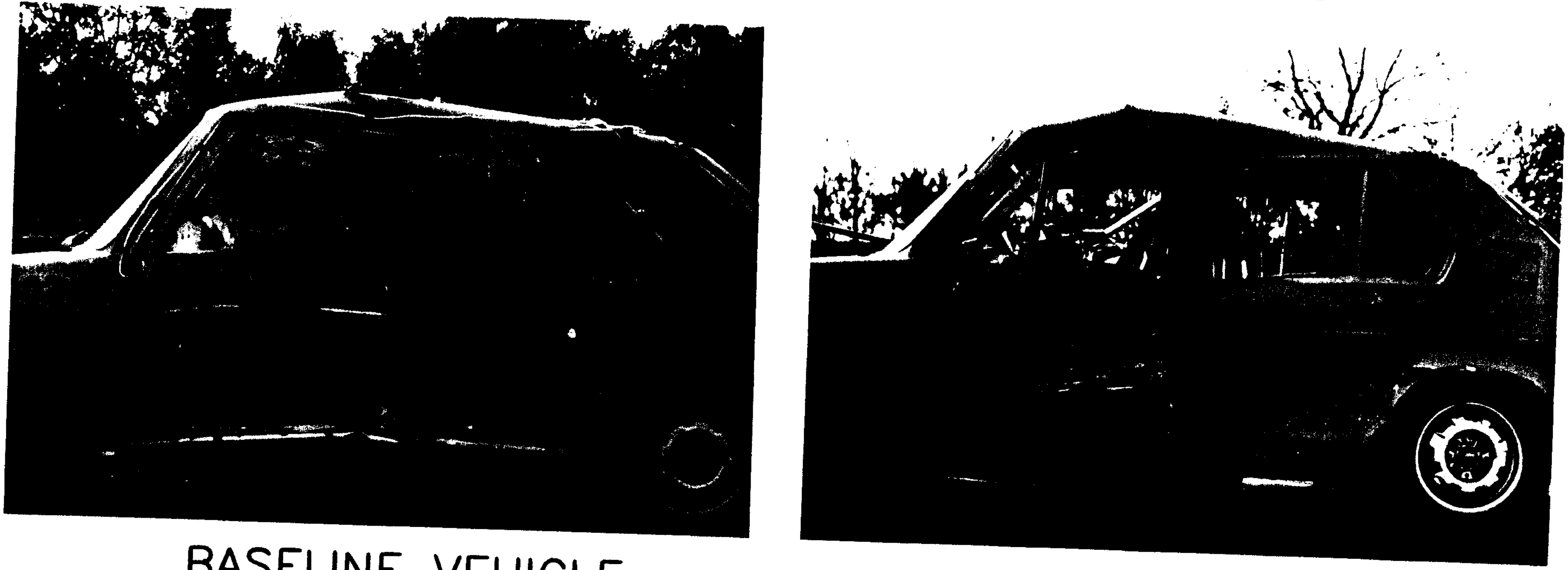

BASELINE VEHICLE

MIV

RESEARCH MIV
MODIFIED INTEGRATED VEHICLE

FIG. 13

SIDE IMPACT TESTS 2 AND 7

DUMMY DRIVER LOADS AT 30 MPH

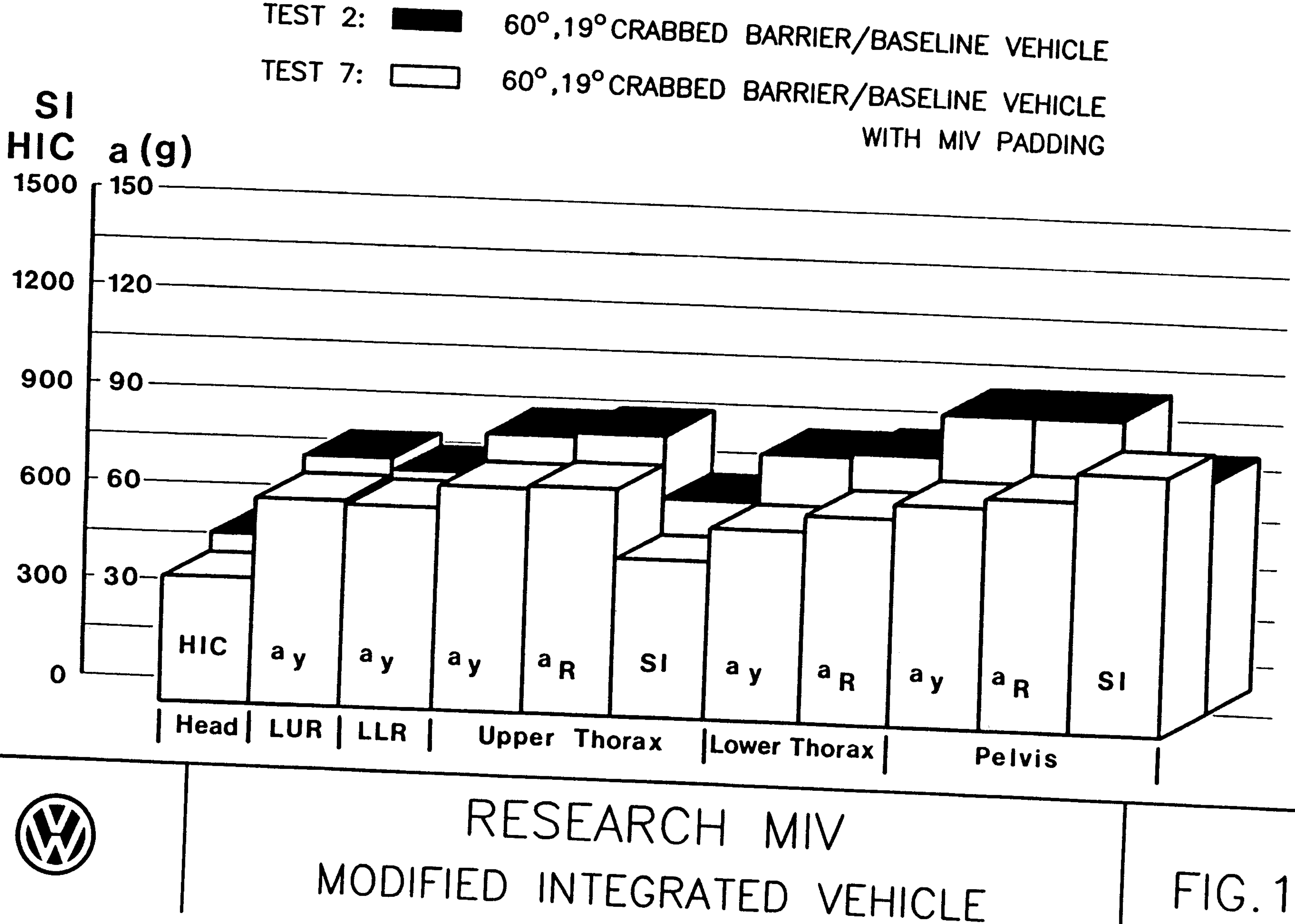

RESEARCH MIV

MODIFIED INTEGRATED VEHICLE

FIG. 14

SIDE IMPACT TESTS 5 AND 7

DUMMY DRIVER LOADS AT 30 MPH

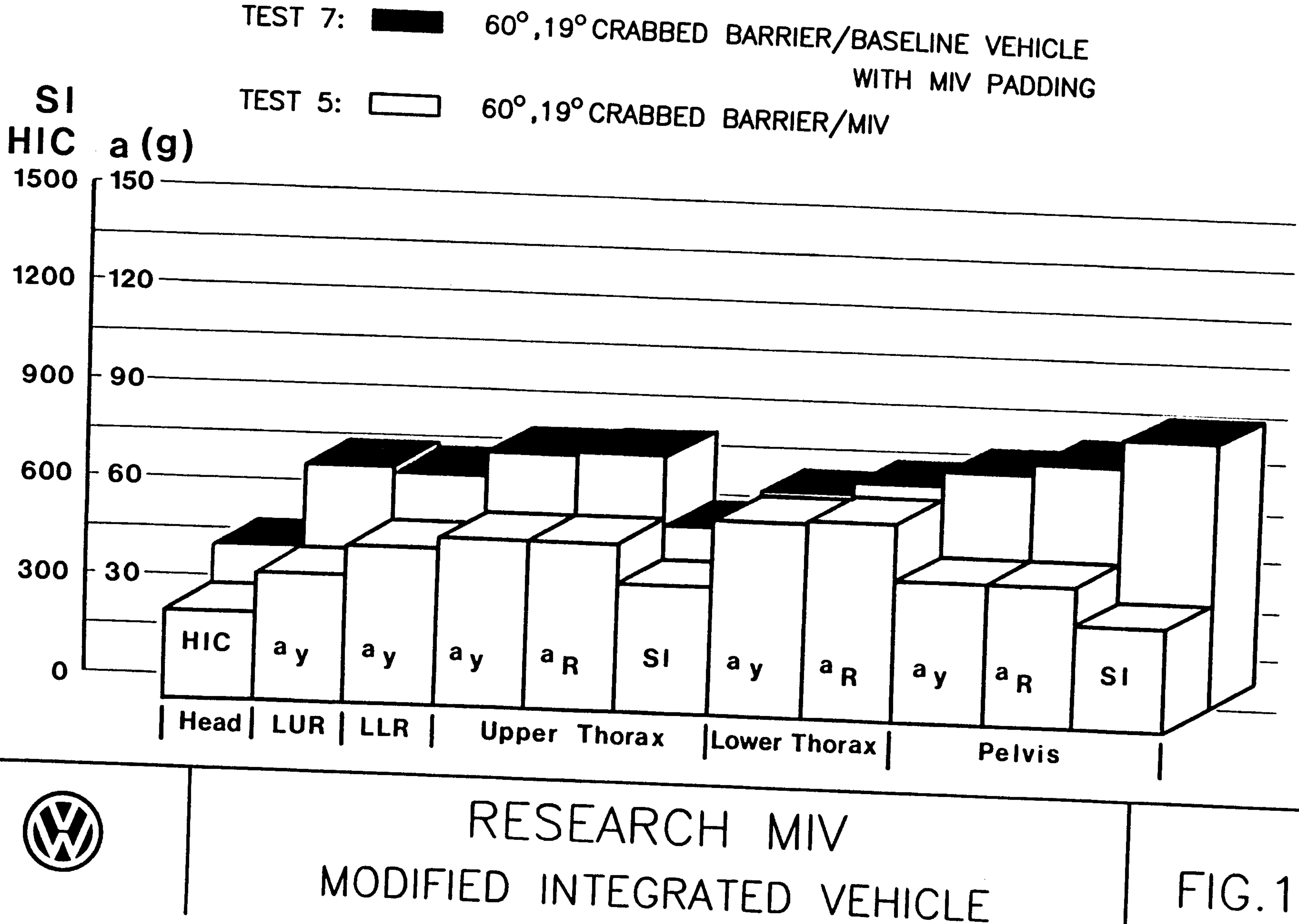

RESEARCH MIV
MODIFIED INTEGRATED VEHICLE

FIG.15

SIDE IMPACT TESTS 2 AND 8

DUMMY DRIVER LOADS AT 30 MPH

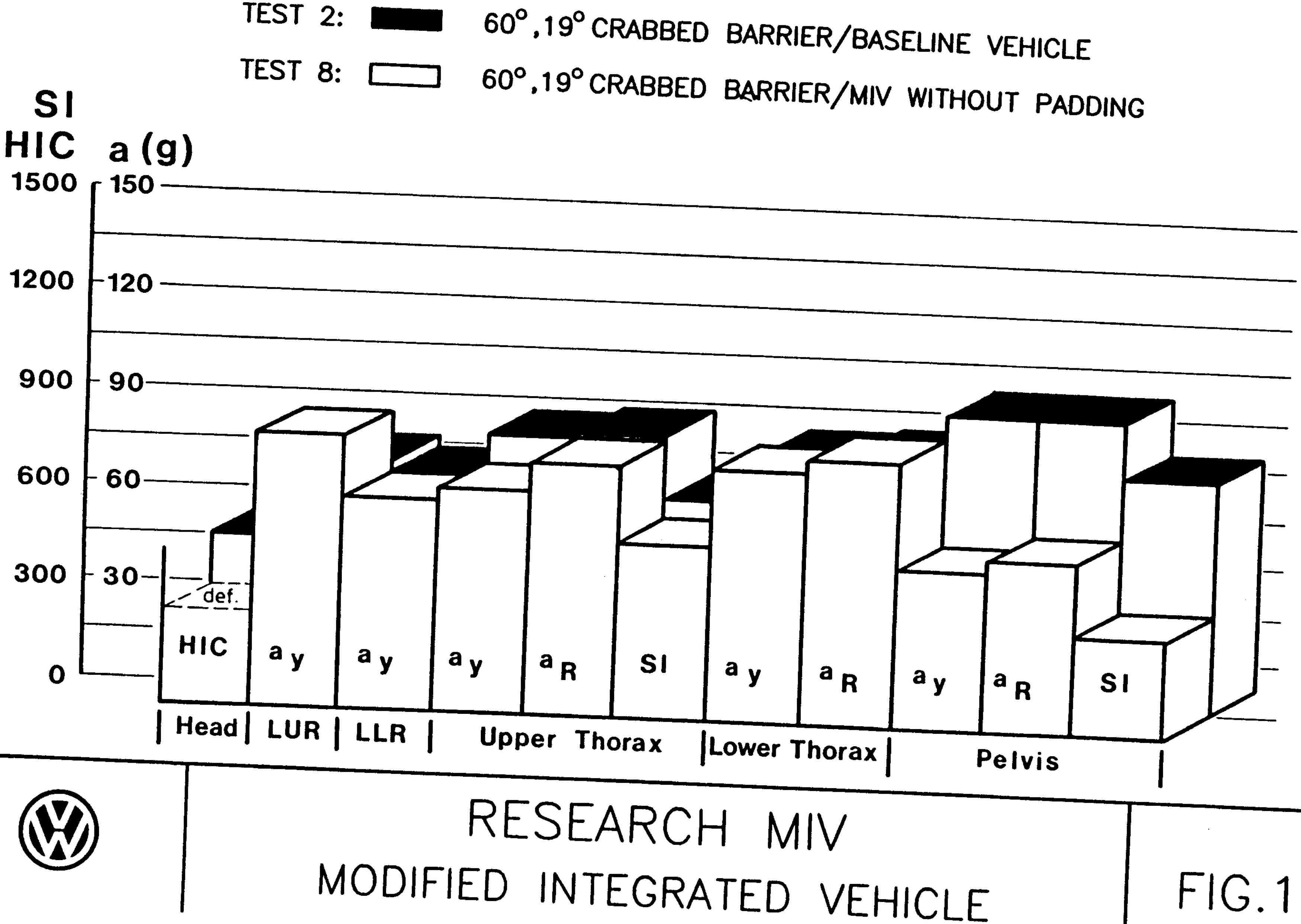

RESEARCH MIV

MODIFIED INTEGRATED VEHICLE

FIG.16

SIDE IMPACT TESTS 5 AND 8

DUMMY DRIVER LOADS AT 30 MPH

TEST 8: ■ 60°,19°CRABBED BARRIER/MIV WITHOUT PADDING

TEST 5: □ 60°,19°CRABBED BARRIER/MIV

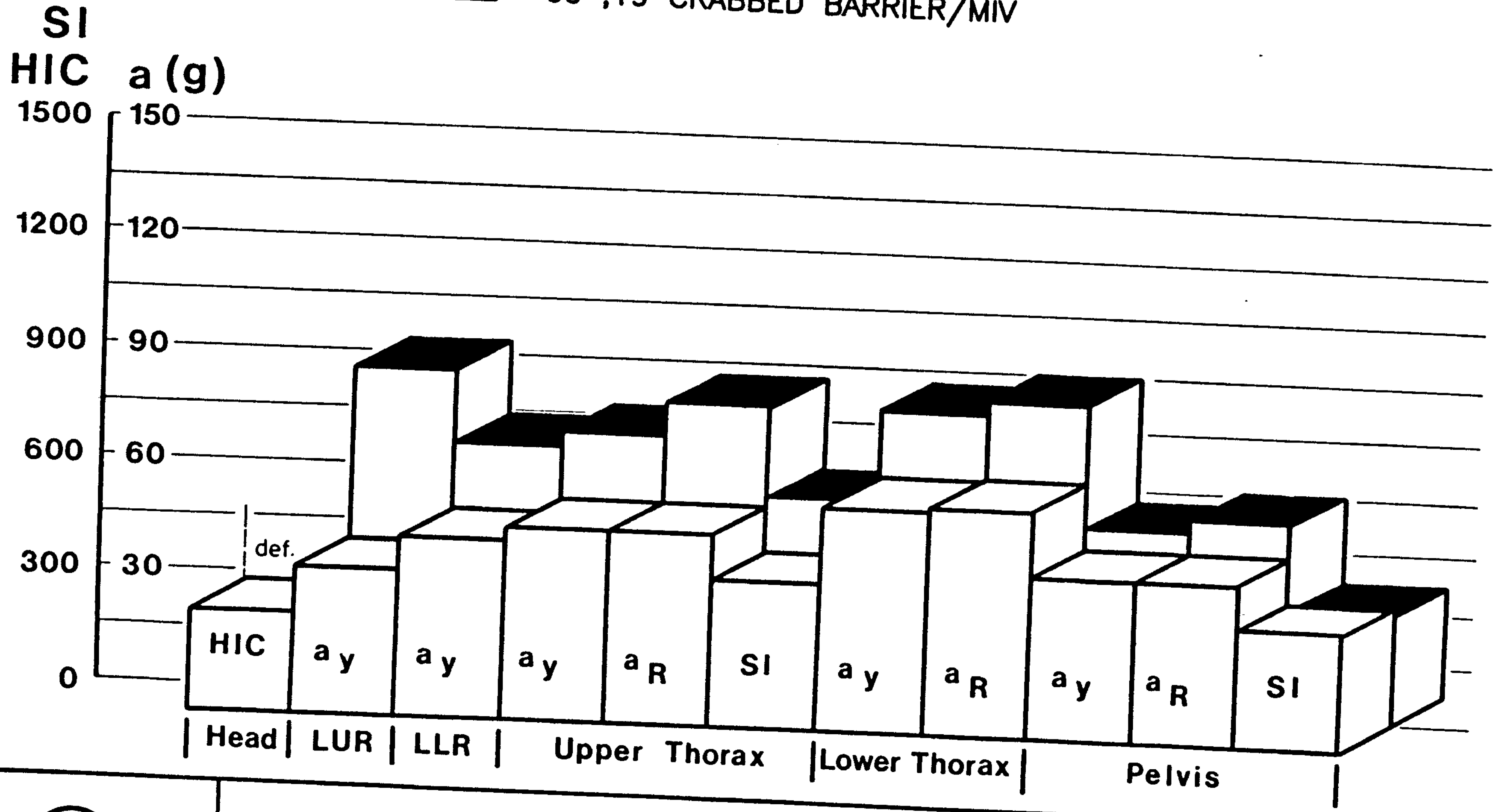

RESEARCH MIV

MODIFIED INTEGRATED VEHICLE

FIG.17

5.2 Frontal Fixed Barrier Impact with MIV

The head-on fixed barrier impact was conducted with the MIV at 35 mph (Figure 18). Working principles of a refined passive restraint system and a refined steering system were simulated together with the refined "Integrated Structure."

A reduction of spool out of about 5 cm was simulated together with an uncoupling of the steering column.

The MIV complied in all respects with impact related FMVSS (Table 1).

FRONTAL IMPACT WITH MIV

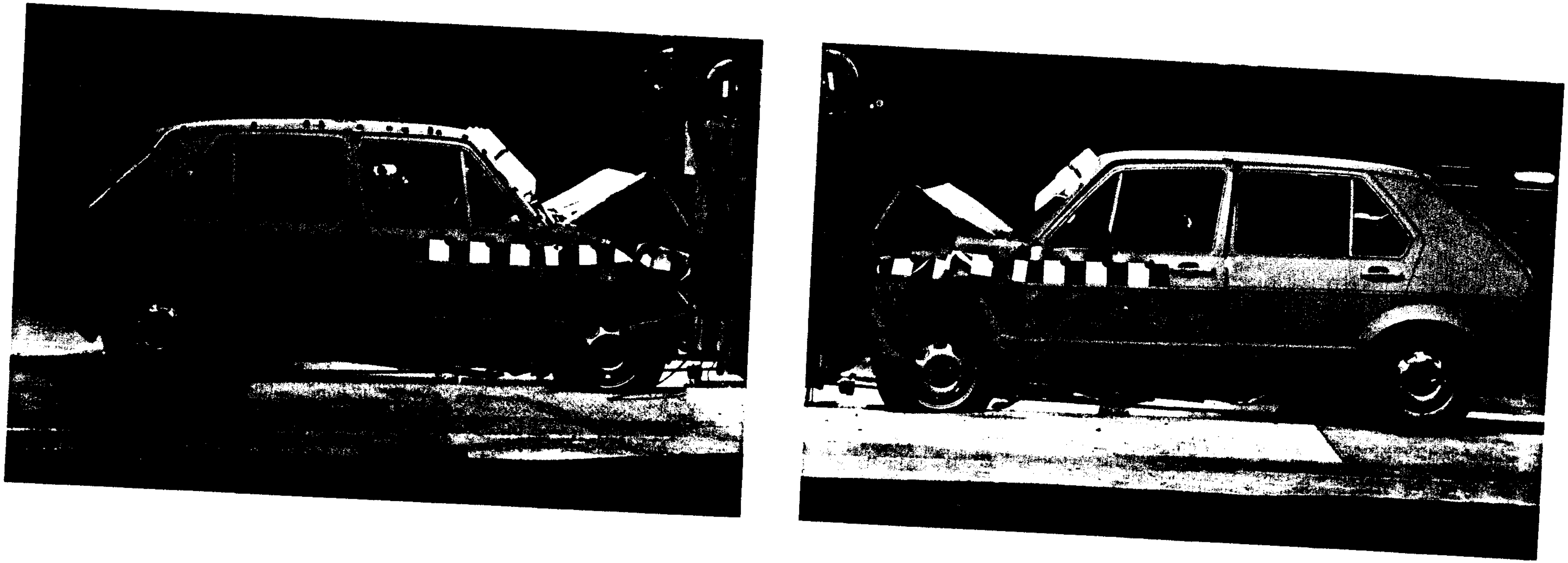

IMPACT SPEED = 35 MPH

RESEARCH MIV
MODIFIED INTEGRATED VEHICLE

FIG. 18

FRONTAL IMPACT WITH MIV

DUMMY LOADS

		DRIVER	PASSENGER
HEAD : HIC		554	639
CHEST:	A_{Res} (G) (3MS)	38.1	40.3
	SI	335	359
PELVIS:	A_{Res} (G) (3MS)	46.5	48.2
	SI	381	371
FEMUR LOAD L/R (KN)		6.7/6.2	7.2/6.0

IMPACT VELOCITY = 35 MPH

RESEARCH MIV

MODIFIED INTEGRATED VEHICLE

TAB.1

5.3 Phase II Side Impacts

The effectiveness of the MIV vehicle layout was to be evaluated with Chevrolet Citation-to-MIV side impact tests with a 19° and 27° degree crabbed Citation at a 60 and 90 degree impact angle at a 40 and 34 mph impact velocity respectively (Figures 4, 4A and B). In addition to the change in the test configuration and parameters, the impact point in Phase II is not between the A- and B-pillars but between the A-pillar and the front wheel.

These new test configurations and parameters resulted from a review by NHTSA of the completed NCSS accident file. These tests represent what the NHTSA believes to constitute an environment that may produce serious injury.

5.3.1 Comparison of Phase I and II Test Configurations

Figure 19 shows the difference between dummy loadings in side impact tests with Phase I and II test configurations:

- Phase I 60° side impact
  with 19° crabbed Barrier
  and baseline vehicle at 40 mph

- Phase II 60° side impact
  with 19° crabbed Chevrolet Citation
  and baseline vehicle at 40 mph

The test results indicate that the crabbed Barrier in the Phase I test configuration is more aggressive than the crabbed Citation in the Phase II test configuration, except in the pelvic area.

SIDE IMPACT TESTS 6 AND 9

DUMMY DRIVER LOADS AT 40 MPH

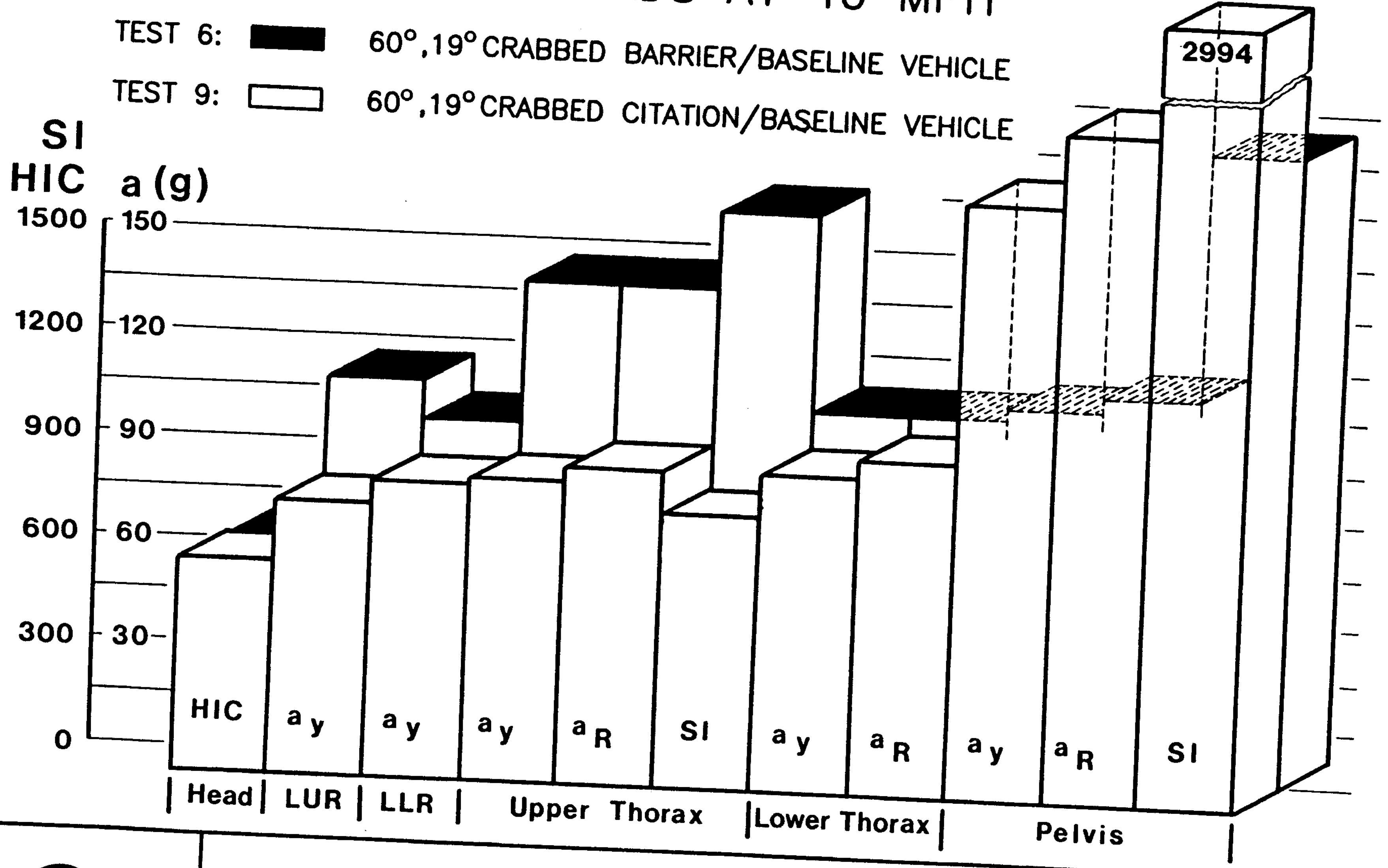

RESEARCH MIV
MODIFIED INTEGRATED VEHICLE

FIG.19

5.3.2 Effectiveness of the MIV in Phase II

The effectiveness of the MIV layout in the Phase II side impact tests at 60° and 90° is shown in Figure 20 and 21. Here, in contrast to the Phase I results, the MIV measures reduce dummy loadings mainly in the lower thoracic and pelvic area. The reduction is not as evident in the head and upper thoracic area. This demonstrates that the MIV measures designed for a less severe crash condition in Phase I and probably also the new padding supplied by NHTSA are less effective in the upper body regions with the modified Phase II test configurations and parameters. The structural deformation is compaired in Figure 20A and 21A.

These results indicate that further research is necessary in the complex field of side impact occupant protection to achieve the best overall protection with the precondition of maximum economic benefit for the entire vehicle population and relevant collision types to justify incorporation of MIV components tested into production vehicles.

Further research is indicated to determine whether other measures such as front structure modifications to control vehicle aggressivity will be more effective than MIV measures.

A very promising step in this direction is demonstrated by the results of the 90° baseline side impact test 13 with the 27° crabbed Citation and the baseline vehicle with bumper/sill engagement. It was simulated by lowering the Citation and raising the Rabbit, because not only the bumper but also the longitudinal frame member of the striking vehicle should have sill engagement with the struck vehicle.

This concept leads to a greater dummy load reduction than the MIV measures when only accelerations and associated HIC and SI values are compared (Figure 22).

Based upon film analysis, however, the neck flexion angles of the dummies were shown to increase. The structural deformation resulting from test 10 and 13 without and with bumper/sill engagement is compared in Figure 22 A.

This test was performed to provide a basis for the side impact computer simulation study, a part of the Phase II of this project, and to validate the VW computer model.

5.4 Comments

The objective of the MIV project was to develop measures for the 35 mph frontal fixed barrier impact and the 30 mph side impact with the crabbed barrier without taking into account compatibility considerations, such as matching front and side structures of the MIV. But the potential for dummy load reduction, as previously mentioned, will depend upon the MIV frontal structure developed for the 35 mph head on fixed barrier impact.

Further research on a broader scale with a broad range of vehicle and collision types is required to find those measures for the front and the side structures which provide requisite economic benefits. In this respect not only measures for the struck, but also those for the striking vehicle must be investigated, see test 13, with bumper/sill engagement.

SIDE IMPACT TESTS 9 AND 11

DUMMY DRIVER LOADS AT 40 MPH

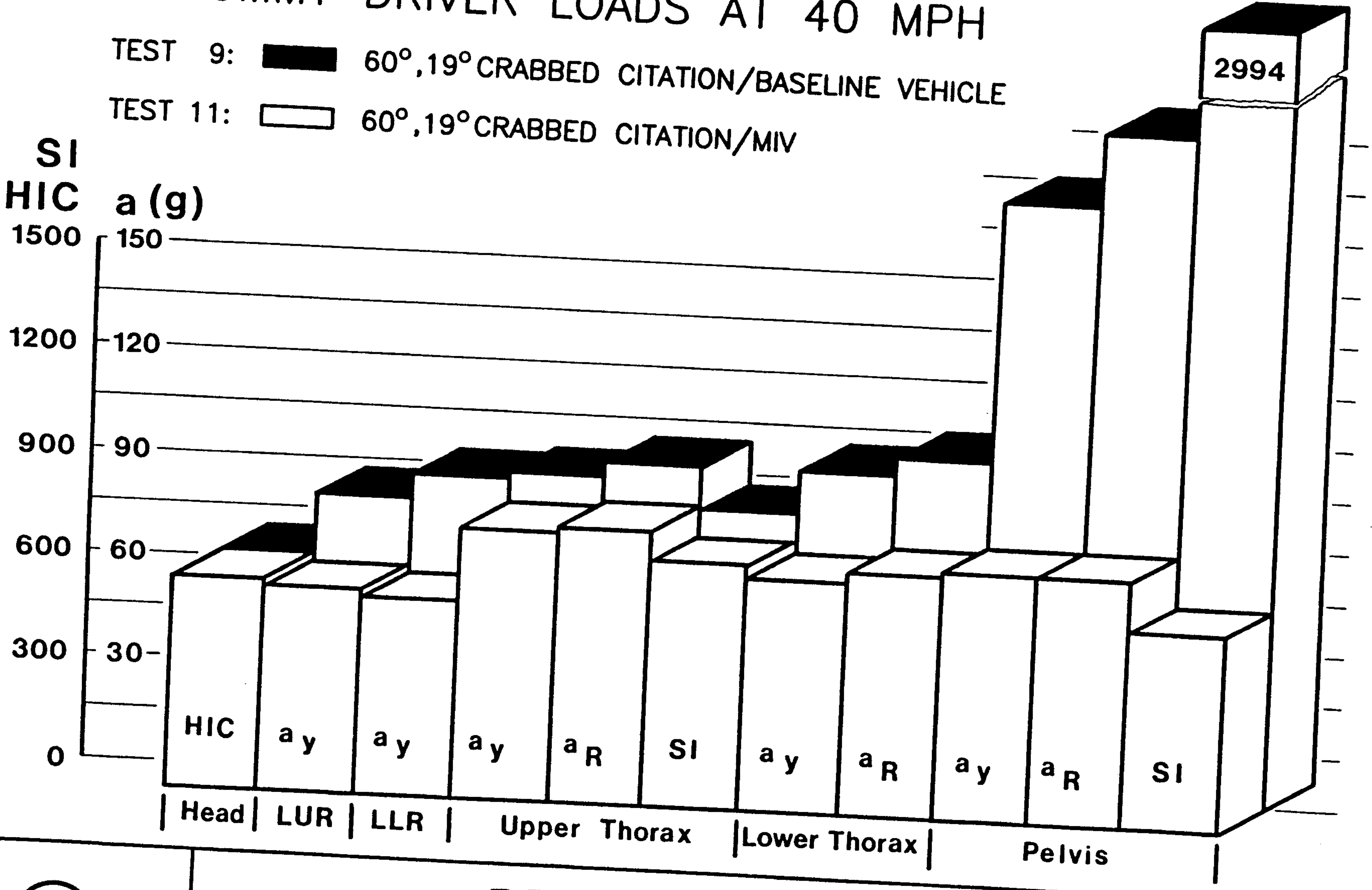

RESEARCH MIV

MODIFIED INTEGRATED VEHICLE

FIG.20

SIDE IMPACT

COMPARISON OF TEST 9 AND 11

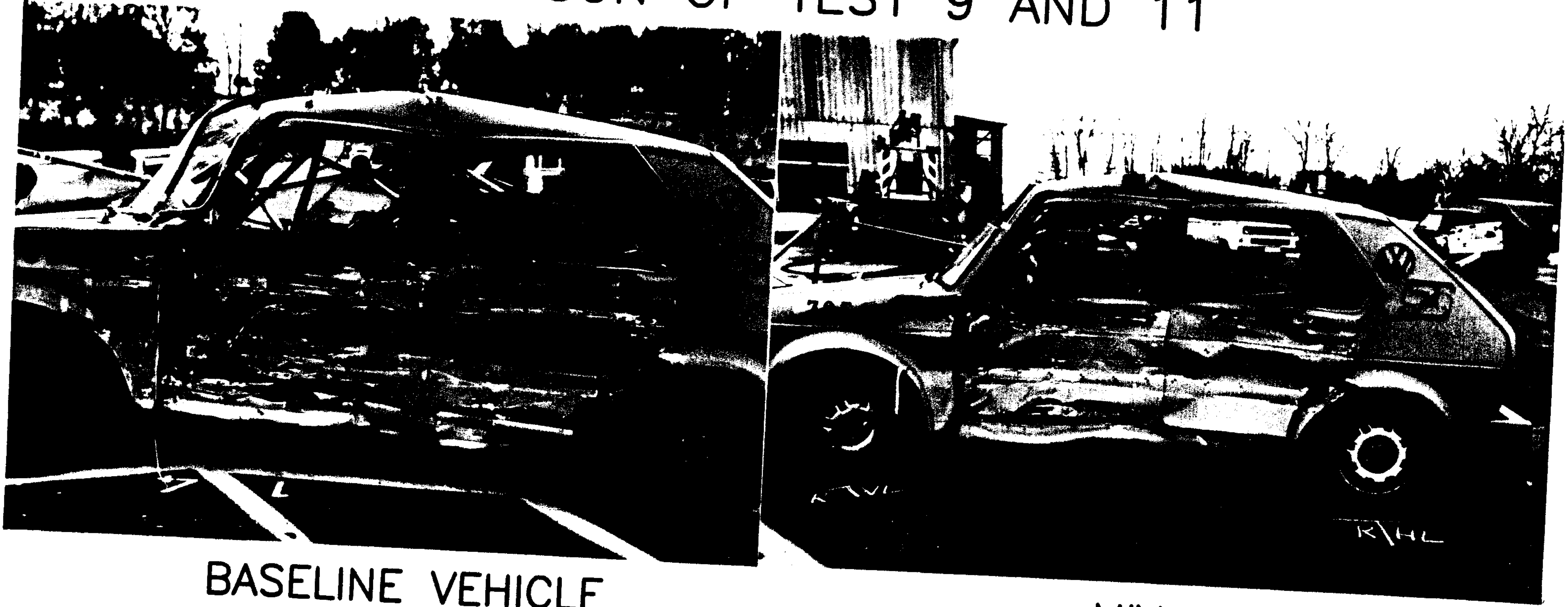

BASELINE VEHICLE

MIV

RESEARCH MIV
MODIFIED INTEGRATED VEHICLE

FIG.20A

SIDE IMPACT TESTS 10 AND 12

DUMMY DRIVER LOADS AT 34 MPH

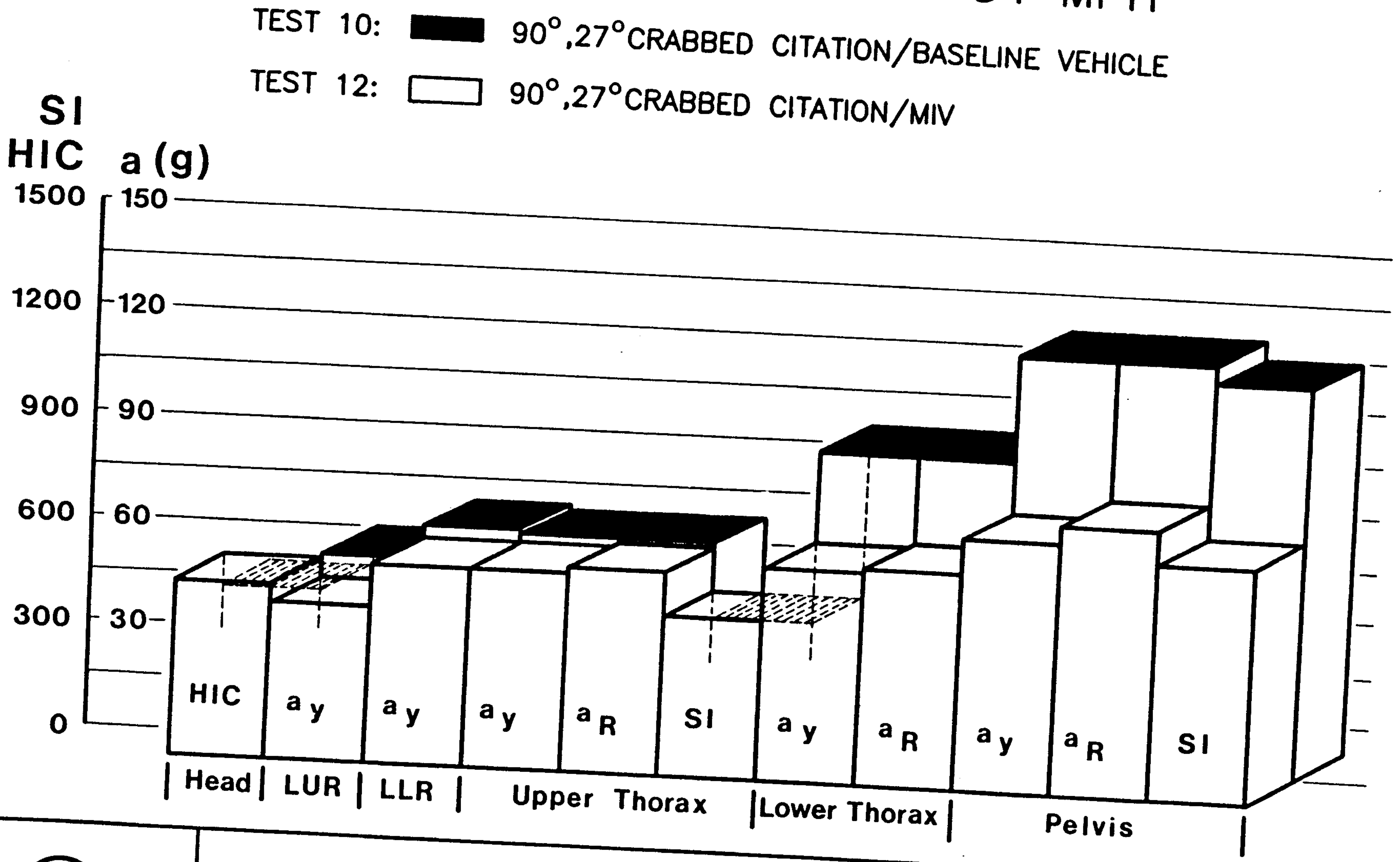

RESEARCH MIV

MODIFIED INTEGRATED VEHICLE

FIG.21

SIDE IMPACT
COMPARISON OF TEST 10 AND 12

BASELINE VEHICLE

MIV

RESEARCH MIV
MODIFIED INTEGRATED VEHICLE

FIG.21A

SIDE IMPACT TESTS 10 AND 13

DUMMY DRIVER LOADS AT 34 MPH

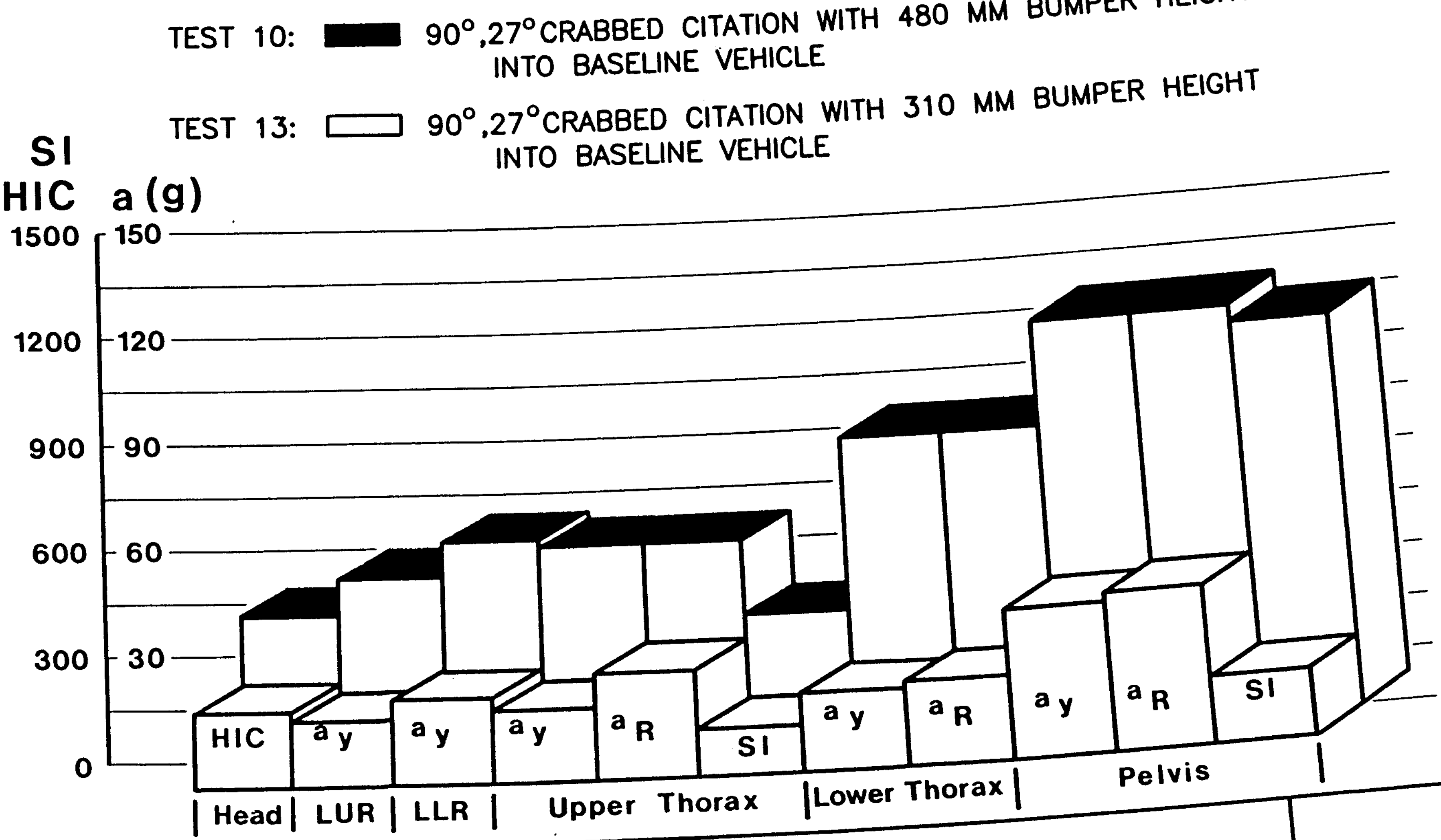

RESEARCH MIV

MODIFIED INTEGRATED VEHICLE

FIG.22

SIDE IMPACT

COMPARISON OF TEST 10 AND 13

BASELINE VEHICLE

BASELINE VEHICLE
BUMPER/SILL ENGAGEMENT

RESEARCH MIV
MODIFIED INTEGRATED VEHICLE

FIG.22A

6. AIS Computation and Values

Injury-predictive models of the severity of blunt thoracic trauma have been developed by NHTSA using the data gathered in a series of side impact tests utilizing cadaver subjects. The candidate dependent variables which have been selected for possible use in quantifying the level of injury are the AIS numbers for the various types of thoracic injuries and the number of rib fractures. A twelve accelerometer network has been developed to measure response of the thorax. Locations of the accelerometers are described in Figure 1.

The transitional steps from medical ratings and mechanical parameters to injury-predictive models include:

- Study of correlation between the injury and mechanical variables and
- Development of models using statistical procedures. The predictive models, which were generated using the linerar regression analysis.

The transformation of mechanical parameters to AIS values is described and discussed in the paper of R.H. Eppinger, R.M. Morgan and J. H. Marcus "Side Impact Data Analysis" presented at the 9th ESV Conference in 1982.

As part of a continuing NHTSA study of thoracic injury resulting from side impact loading, the interrelationships between subject age, various kinematic parameters characterizing the impact, and injury severity were investigated with the aid of data from a series of 30 cadaver tests.

Table 2 catagorizes the 30 tests by research institution, type of test, and number of tests. As can be noted, there is a large variation in type of test: from lateral pendulum tests to actual vehicle tests.

HSRI	6 RIGID WALL SLED
	6 PADDED WALL SLED
	4 PENDULUM
WSU	1 PADDED WALL SLED
HEIDELBERG	6 RIGID WALL SLED
	4 PADDED WALL SLED
ONSER	1 BASELINE CAR CRASH
	2 MODIFIED CAR CRASH

Table 2: Data Source of 30 Cadaver Tests

Through analysis these test results NHTSA developed the following equations to calculate the so-called "fatality rate" for the left upper and lower rib as well as the upper and lower spine.

Left Upper Rib	.002 *Peak_Accel + .0018*Age -.25	r=.94	SE=.06
Left Lower Rib	.002 *Peak_Accel + .0018*Age -.25	r=.94	SE=.06
Upper Spine	.0015 *Peak_Accel + .0032*Age -.229	r=.67	SE=.08
Lower Spine	.002 *Peak_Accel + .0036*Age -.28	r=.67	SE=.13

The equations of the "fatality rate" were derived using the two highest AIS injuries observed in a particular occupant.

It was calculated from the NCSS accident file by examining each AIS pair category and calculating the percentage of fatalities observed within each subgroup. Table 3 shows each AIS pair and its associated fatality rate.

(AIS I, AIS II)	Fatality Rate
(0,0)	.00000
(1, 0 -1)	.0001131
(2, 0 -1)	.00073
(2, 2)	.00456
(3, 0 -1)	.00434
(3, 2)	.00593
(3, 3)	.02174
(4, 0 -1)	.0392
(4, 2)	.04301
(4, 3)	.10526
(4, 4)	.12821
(5, 0 -1)	.28
(5, 2)	.36667
(5, 3)	.48529
(5, 4)	.58182
(5, 5)	.86364
(6, ANY)	1.00000

Table 3: "Fatality Rate" by (AIS I, AIS II)

In the following Tables 4 to 16 the age dependent values of "fatality rate" and AIS, calculated by NHTSA on the basis of peak accelerations measured during the 13 tests performed, are presented. The AIS and "fatality rate" correlation of Table 3 was used to transform the calculated "fatality rate" back to the corresponding AIS pair.

DUMMY DRIVER LOADS TEST 1

NEW AIS EVALUATION

LOCATION OF ACCELEROMETER	ACCELERATION	AGE (YEARS)									
		20		30		40		50		60	
		FAT. R.	AIS	FAT. R.	AIS	FAT. R.	AIS	FAT. R.	AIS	FAT. R.	AIS
L U R	109.1	0.0042	2	0.0222	3	0.0402	4	0.0582	4	0.0762	4
L L R	97.2	0.0000	0	0.0000	0	0.0164	3	0.0344	3	0.0524	4
T 1 Y	87.1	0.0000	0	0.0000	0	0.0297	3	0.0617	4	0.0937	4
T 12 Y	70.7	0.0000	0	0.0000	0	0.0054	3	0.0414	4	0.0774	4

RESEARCH MIV

MODIFIED INTEGRATED VEHICLE

TAB.4

DUMMY DRIVER LOADS TEST 2

NEW AIS EVALUATION

LOCATION OF ACCELEROMETER	ACCELERATION	AGE (YEARS) 20		30		40		50		60	
		FAT. R.	AIS	FAT. R.	AIS	FAT. R.	AIS	FAT. R.	AIS	FAT. R.	AIS
L U R	74.7	0.0000	0	0.0000	0	0.0000	0	0.0000	0	0.0074	3
L L R	72.0	0.0000	0	0.0000	0	0.0000	0	0.0000	0	0.0020	2
T 1 Y	78.7	0.0000	0	0.0000	0	0.0170	3	0.0491	4	0.0811	4
T 12 Y	72.5	0.0000	0	0.0000	0	0.0090	3	0.0450	4	0.0810	4

RESEARCH MIV
MODIFIED INTEGRATED VEHICLE

TAB.5

DUMMY DRIVER LOADS TEST 3

NEW AIS EVALUATION

LOCATION OF ACCELEROMETER	ACCELERATION	AGE (YEARS) 20 FAT. R.	20 AIS	30 FAT. R.	30 AIS	40 FAT. R.	40 AIS	50 FAT. R.	50 AIS	60 FAT. R.	60 AIS
L U R	87.5	0.0000	0	0.0000	0	0.0000	0	0.0150	3	0.0330	3
L L R	101.0	0.0000	0	0.0060	3	0.0240	3	0.0420	4	0.0600	4
T 1 Y	91.1	0.0000	0	0.0036	2	0.0356	3	0.0676	4	0.0996	4
T 12 Y	111.6	0.0152	3	0.0512	4	0.0872	4	0.1232	4	0.1592	4

RESEARCH MIV
MODIFIED INTEGRATED VEHICLE

TAB.6

DUMMY DRIVER LOADS TEST 4

NEW AIS EVALUATION

LOCATION OF ACCELEROMETER	ACCELERATION	AGE (YEARS) 20		30		40		50		60	
		FAT. R.	AIS	FAT. R.	AIS	FAT. R.	AIS	FAT. R.	AIS	FAT. R.	AIS
L U R	106.3	0.0000	0	0.0166	3	0.0346	3	0.0526	4	0.0706	4
L L R	96.0	0.0000	0	0.0000	0	0.0140	3	0.0320	3	0.0500	4
T 1 Y	90.9	0.0000	0	0.0034	2	0.0353	3	0.0674	4	0.0994	4
T 12 Y	116.9	0.0258	3	0.0618	4	0.0978	4	0.1338	4	0.1698	4

RESEARCH MIV

MODIFIED INTEGRATED VEHICLE

TAB.7

DUMMY DRIVER LOADS TEST 5

NEW AIS EVALUATION

LOCATION OF ACCELEROMETER	ACCELERATION	AGE (YEARS) 20		30		40		50		60	
		FAT. R.	AIS	FAT. R.	AIS	FAT. R.	AIS	FAT. R.	AIS	FAT. R.	AIS
L U R	36.1	0.0000	0	0.0000	0	0.0000	0	0.0000	0	0.0000	0
L L R	48.3	0.0000	0	0.0000	0	0.0000	0	0.0000	0	0.0000	0
T 1 Y	51.8	0.0000	0	0.0000	0	0.0000	0	0.0087	3	0.0407	4
T 12 Y	57.7	0.0000	0	0.0000	0	0.0000	0	0.0154	3	0.0514	4

RESEARCH MIV
MODIFIED INTEGRATED VEHICLE

TAB.8

DUMMY DRIVER LOADS TEST 6

NEW AIS EVALUATION

LOCATION OF ACCELEROMETER	ACCELERATION	AGE (YEARS) 20 FAT. R.	20 AIS	30 FAT. R.	30 AIS	40 FAT. R.	40 AIS	50 FAT. R.	50 AIS	60 FAT. R.	60 AIS
L U R	125.5	0.0370	3	0.0550	4	0.0730	4	0.0910	4	0.1090	4
L L R	121.8	0.0296	3	0.0476	4	0.0656	4	0.0836	4	0.1016	4
T 1 Y	141.5	0.0473	4	0.0793	4	0.1113	4	0.1433	4	0.1753	4
T 12 Y	104.3	0.0006	1	0.0366	3	0.0726	4	0.1086	4	0.1446	4

RESEARCH MIV

MODIFIED INTEGRATED VEHICLE

TAB.9

DUMMY DRIVER LOADS TEST 7

NEW AIS EVALUATION

LOCATION OF ACCELEROMETER	ACCELERATION	AGE (YEARS) 20 FAT. R.	20 AIS	30 FAT. R.	30 AIS	40 FAT. R.	40 AIS	50 FAT. R.	50 AIS	60 FAT. R.	60 AIS
L U R	66.9	0.0000	0	0.0000	0	0.0000	0	0.0000	0	0.0000	0
L L R	62.9	0.0000	0	0.0000	0	0.0000	0	0.0000	0	0.0000	0
T 1 Y	69.8	0.0000	0	0.0000	0	0.0037	2	0.0357	3	0.0677	4
T 12 Y	68.1	0.0000	0	0.0000	0	0.0002	1	0.0362	3	0.0722	4

RESEARCH MIV
MODIFIED INTEGRATED VEHICLE

TAB.10

DUMMY DRIVER LOADS TEST 8

NEW AIS EVALUATION

LOCATION OF ACCELEROMETER	ACCELERATION	AGE (YEARS) 20		30		40		50		60	
		FAT. R.	AIS	FAT. R.	AIS	FAT. R.	AIS	FAT. R.	AIS	FAT. R.	AIS
L U R	111.0	0.0000	3	0.0260	3	0.0440	4	0.0620	4	0.0800	4
L L R	91.6	0.0000	0	0.0000	0	0.0052	3	0.0232	3	0.0412	4
T 1 Y	79.2	0.0000	0	0.0000	0	0.0178	3	0.0498	4	0.0818	4
T 12 Y	76.4	0.0000	0	0.0000	0	0.0168	3	0.0528	4	0.0888	4

RESEARCH MIV
MODIFIED INTEGRATED VEHICLE

TAB.11

DUMMY DRIVER LOADS TEST 9

NEW AIS EVALUATION

LOCATION OF ACCELEROMETER	ACCELERATION	AGE (YEARS)									
		20		30		40		50		60	
		FAT. R.	AIS	FAT. R.	AIS	FAT. R.	AIS	FAT. R.	AIS	FAT. R.	AIS
L U R	80.6	0.0000	0	0.0000	0	0.0000	0	0.0012	2	0.0192	3
L L R	86.6	0.0000	0	0.0000	0	0.0000	0	0.0132	3	0.0312	3
T 1 Y	95.4	0.0000	0	0.0101	3	0.0421	4	0.0741	4	0.1061	4
T 12 Y	106.7	0.0054	3	0.0414	4	0.0774	4	0.1134	4	0.1494	4

RESEARCH MIV
MODIFIED INTEGRATED VEHICLE

TAB.12

DUMMY DRIVER LOADS TEST 10

NEW AIS EVALUATION

LOCATION OF ACCELEROMETER	ACCELERATION	AGE (YEARS) 20		30		40		50		60	
		FAT. R.	AIS	FAT. R.	AIS	FAT. R.	AIS	FAT. R.	AIS	FAT. R.	AIS
L U R	65.7	0.0000	0	0.0000	0	0.0000	0	0.0000	0	0.0000	0
L L R	73.3	0.0000	0	0.0000	0	0.0000	0	0.0000	0	0.0046	3
T 1 Y	61.9	0.0000	0	0.0000	0	0.0000	0	0.0238	3	0.0558	4
T 12 Y	101.0	0.0000	0	0.0300	3	0.0660	4	0.1020	4	0.1380	4

RESEARCH MIV

MODIFIED INTEGRATED VEHICLE

TAB.13

DUMMY DRIVER LOADS TEST 11

NEW AIS EVALUATION

LOCATION OF ACCELEROMETER	ACCELERATION	AGE (YEARS) 20 FAT. R.	20 AIS	30 FAT. R.	30 AIS	40 FAT. R.	40 AIS	50 FAT. R.	50 AIS	60 FAT. R.	60 AIS
L U R	66.6	0.0000	0	0.0000	0	0.0000	0	0.0000	0	0.0000	0
L L R	67.9	0.0000	0	0.0000	0	0.0000	0	0.0000	0	0.0000	0
T 1 Y	78.5	0.0000	0	0.0000	0	0.0167	3	0.0488	4	0.0808	4
T 12 Y	70.6	0.0000	0	0.0000	0	0.0052	3	0.0412	4	0.0772	4

RESEARCH MIV

MODIFIED INTEGRATED VEHICLE

TAB.14

DUMMY DRIVER LOADS TEST 12

NEW AIS EVALUATION

LOCATION OF ACCELEROMETER	ACCELERATION	AGE (YEARS)									
		20		30		40		50		60	
		FAT. R.	AIS	FAT. R.	AIS	FAT. R.	AIS	FAT. R.	AIS	FAT. R.	AIS
L U R	46.5	0.0000	0	0.0000	0	0.0000	0	0.0000	0	0.0000	0
L L R	58.3	0.0000	0	0.0000	0	0.0000	0	0.0000	0	0.0000	0
T 1 Y	58.6	0.0000	0	0.0000	0	0.0000	0	0.0189	3	0.0509	4
T 12 Y	64.3	0.0000	0	0.0000	0	0.0000	0	0.0286	3	0.0646	4

RESEARCH MIV
MODIFIED INTEGRATED VEHICLE

TAB.15

DUMMY DRIVER LOADS TEST 13

NEW AIS EVALUATION

LOCATION OF ACCELEROMETER	ACCELERATION	AGE (YEARS) 20		30		40		50		60	
		FAT. R.	AIS	FAT. R.	AIS	FAT. R.	AIS	FAT. R.	AIS	FAT. R.	AIS
L U R	18.3	0.000	0	0.000	0	0.000	0	0.000	0	0.000	0
L L R	24.7	0.000	0	0.000	0	0.000	0	0.000	0	0.000	0
T 1 Y	21.2	0.000	0	0.000	0	0.000	0	0.000	0	0.000	0
T 12 Y	21.8	0.000	0	0.000	0	0.000	0	0.000	0	0.000	0

RESEARCH MIV
MODIFIED INTEGRATED VEHICLE

TAB.16

7. Phase II Side Impact Computer Simulation

The objective of this study is the qualitative analysis of the influence of the following parameters by means of computer simulation:

- the force/deflection (F/D) characteristic of the front structure
- the curb weight and load as well as
- the bumper height in conjunction with the height of the longitudinal frame member

of the striking vehicle on the dummy loads and side structure deformation of the struck vehicle during a 90° side impact.

The differences for the front structure could be the F/D-characteristic in general and as it relates to different fixed barrier impact velocities (30, 35 and 40 mph).

Three different vehicles were to be taken into account with the curb weight of 2000, 3000 and 4000 lbs, laden or unladen.

The bumper height was to be in the range of 300 to 500 mm.

7.1 Computer Model

For this parametric study of side impacts in general, Volkswagen had the opportunity to use two computer models. One model was developed by Dr. Hofmann, a member of the Audi Development Center. The other is a new model developed by Dr. Richter, a member of the VW Research and Development Department.

The Hofmann Computer Model is depicted in Figure 23. This program can deal with questions as to the influence of mass and frontal structure on dummy loads and side structure deformation. Because the side structure (mass m_2) can move only in the lateral direction, rotation is not possible and, therefore, it is difficult to simulate the influence of bumper height variation with this model.

For this reason, Volkswagen proposed to use the Richter Computer Model, shown in Figure 24. This front and side structure model is divided into two parts, whereby the upper and lower parts are connected with deformable elements. Each part has its own F/D characteristic. With this additional degree of freedom it is possible to analyze in general the influence of the bumper height in conjunction with the height of the longitudinal frame member of the front structure upon the project target figures by adjusting mass m_{su} and the deformation characteristics FZSU and between m_{su} and m_{so}. So that the rotation of the deforming door and the roll behavior of the struck vehicle can be simulated by different velocities of the upper and lower parts in the lateral direction, using the corresponding F/D characteristics of the upper and lower parts of the structures and those of the deformable elements between them.

AUDI COMPUTER MODELL

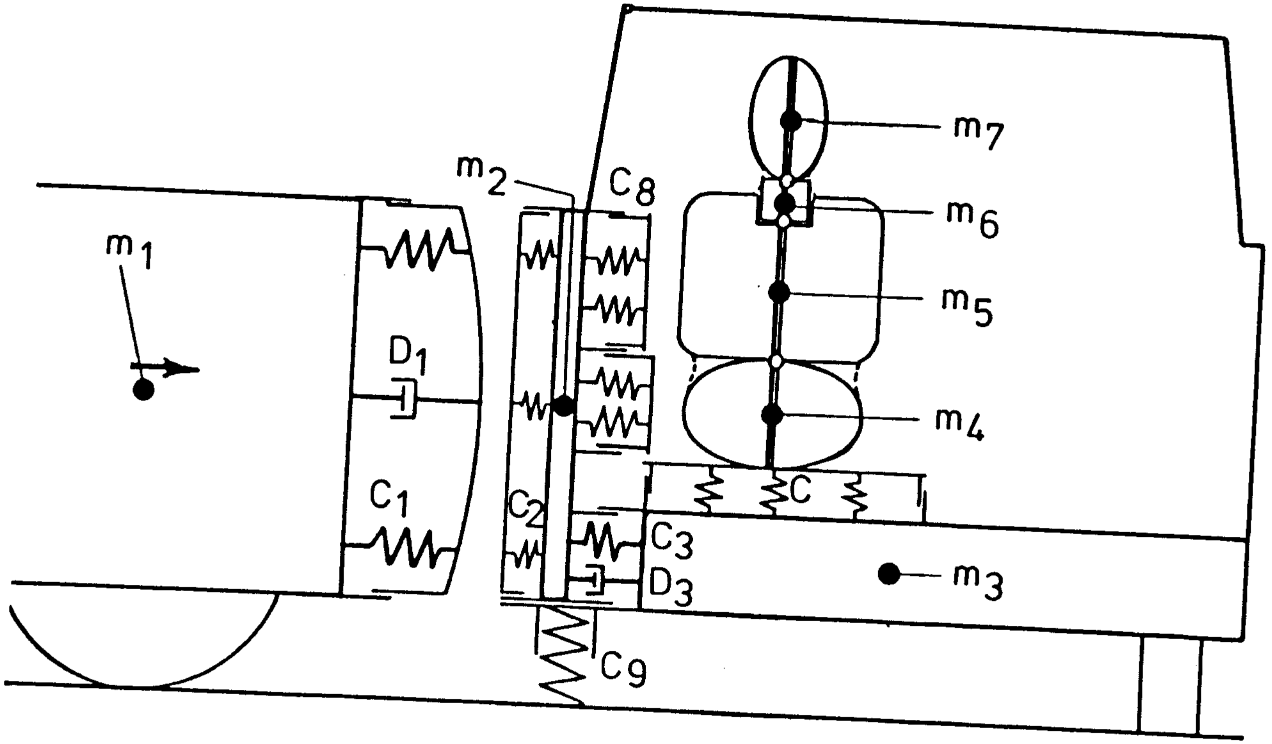

RESEARCH MIV

MODIFIED INTEGRATED VEHICLE

FIG.23

VW COMPUTER MODELL

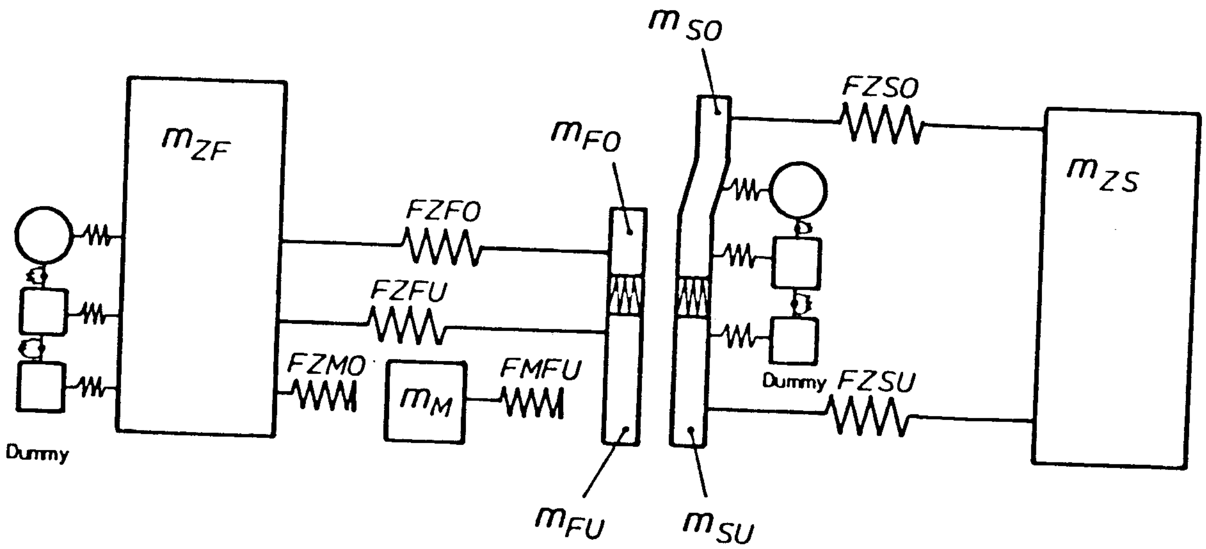

RESEARCH MIV
MODIFIED INTEGRATED VEHICLE

FIG.24

7.2 Methodology

For this qualitative analysis of side impact parameters the VW computer model was validated with the Phase II 90° baseline side impact (test 10) with the 27° crabbed Citation and the baseline vehicle and a second impact (test 13) with bumper/sill engagement. In this case the heights of the vehicles (not only that of the bumper) were modified such, that the bumper and the longitudinal frame member of the Citation struck the sill of the stationary baseline vehicle.

With this validated computer model the analysis of the influence of the parameters:

- front structure
- curb weight and load
- bumper and longitudinal frame member height

of the striking vehicle on dummy loads was performed as follows:

The basic force deflection characteristics of the front structure were evaluated using the characteristics of the mean large German car in the mass range of 1050 kg to 2000 kg. The vehicle has a weighted mean mass of 1230 kg and a weighted mean structure as shown in Figure 25. It was selected to simulate the behavior of the Citation and to validate the computer model, because corresponding F/D characteristics were not available for the upper and lower structural elements of the Citation. This data can be only compared to the F/D characteristic of the resultant deformation force obtained from the NHTSA repeatability program at 35 mph head-on fixed barrier impacts and the simulated characteristic of the computed 35 mph front structure layout, Figure 26.

BASIC FRONTAL F/D CHARACTERISTICS OF MEAN LARGE GERMAN CAR

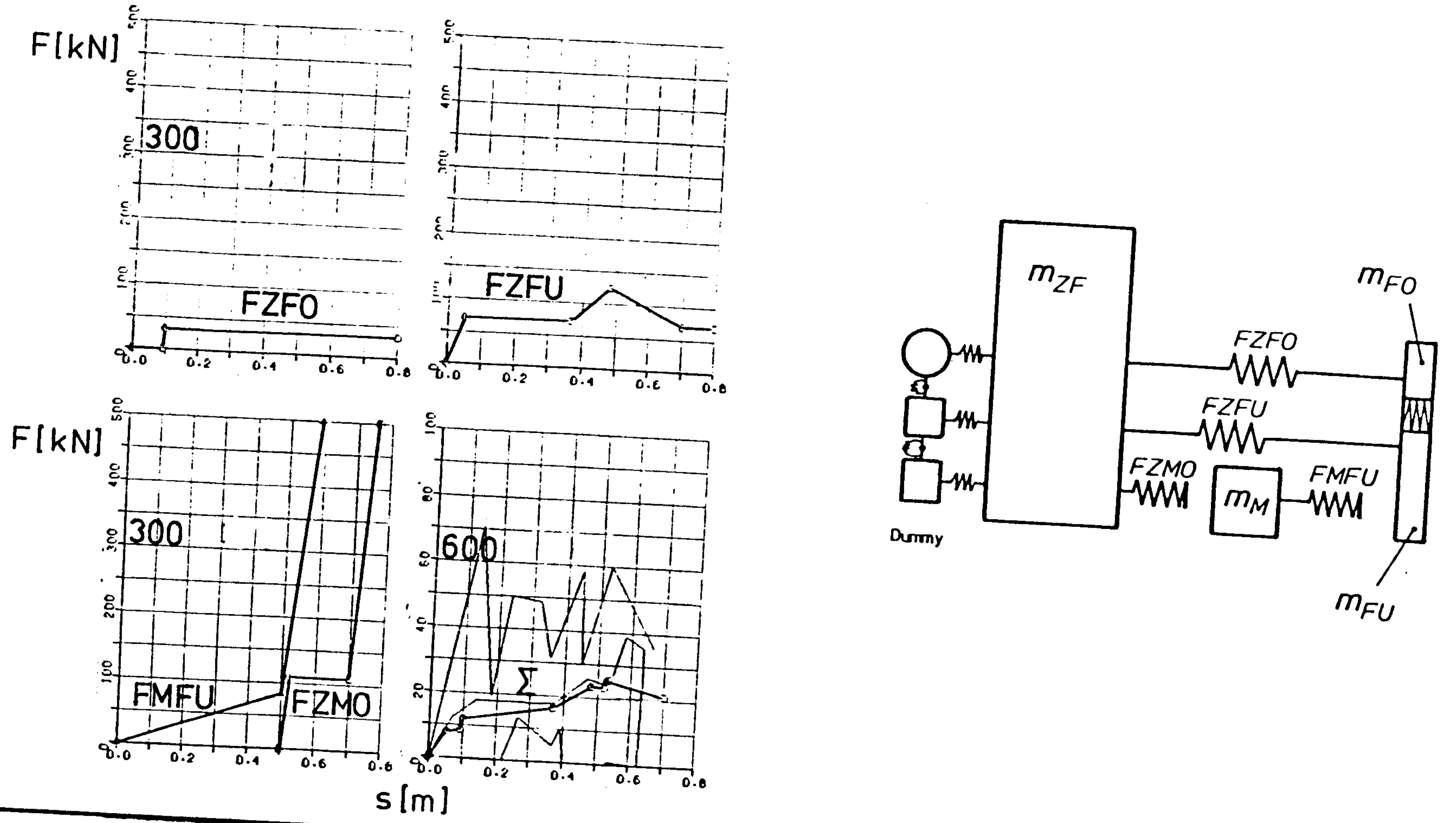

RESEARCH MIV

MODIFIED INTEGRATED VEHICLE

FIG.25

F/D CHARACTERISTICS OF SIMULATED MEAN LARGE GERMAN CAR AND CITATION

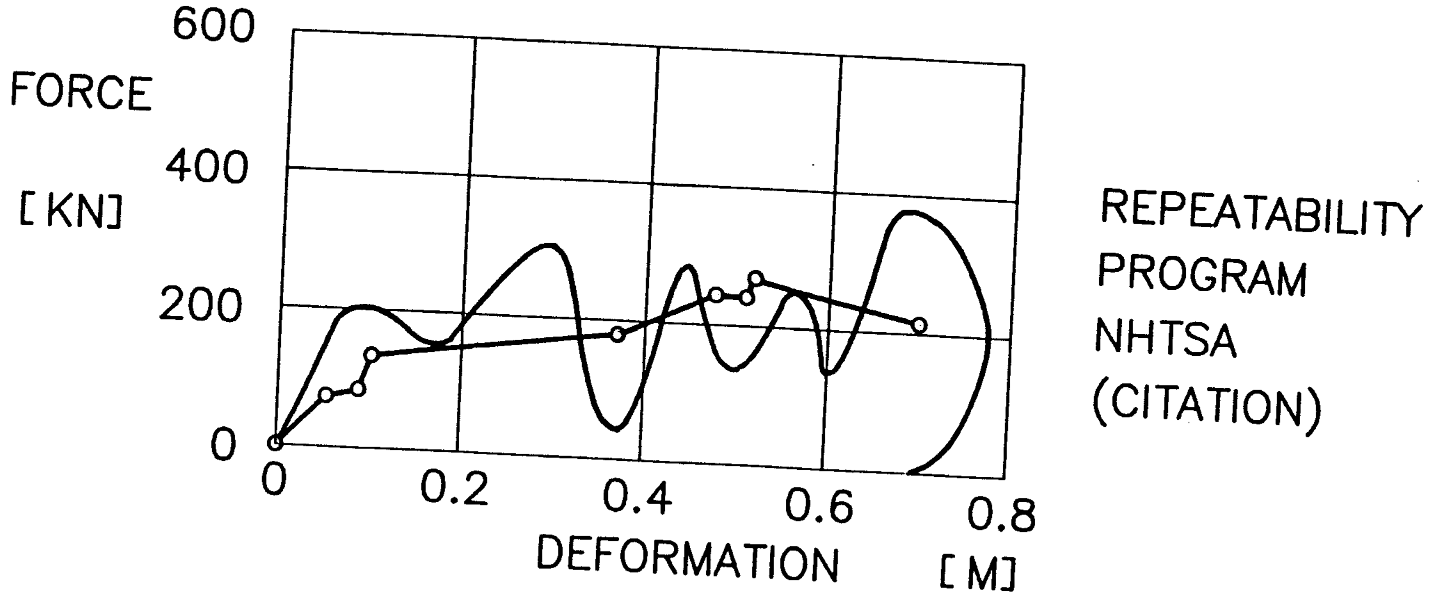

35 MPH HEAD–ON FIXED BARRIER IMPACT

RESEARCH MIV
MODIFIED INTEGRATED VEHICLE

FIG.26

The basic front structure F/D characteristics are related to the 30 mph head-on fixed barrier impact. The structural characteristics were modified consistent with 35 and 40 mph impact velocities such that the front structural deformation was substantially similar in each case, Figure 27.

Figures 28, 29 and 30 show the deceleration/time functions of the engine and the passenger compartment as well as the deformation/time functions of the three different structures during the 30, 35 and 40 mph head-on fixed barrier impact.

Comparison of dummy response data and computer simulation results of test 10 can be seen in Figure 31 and Table 18. The 3 ms values and the form of the acceleration/time history are similar, but there is a phase shift of the chest curve because it was only simulated by one mass and not by several as is the case with the anthropometric dummy.

3 DIFFERENT FRONT STRUCTURE F/D CHARACTERISTICS
LAYOUT VELOCITY 30, 35 AND 40 MPH

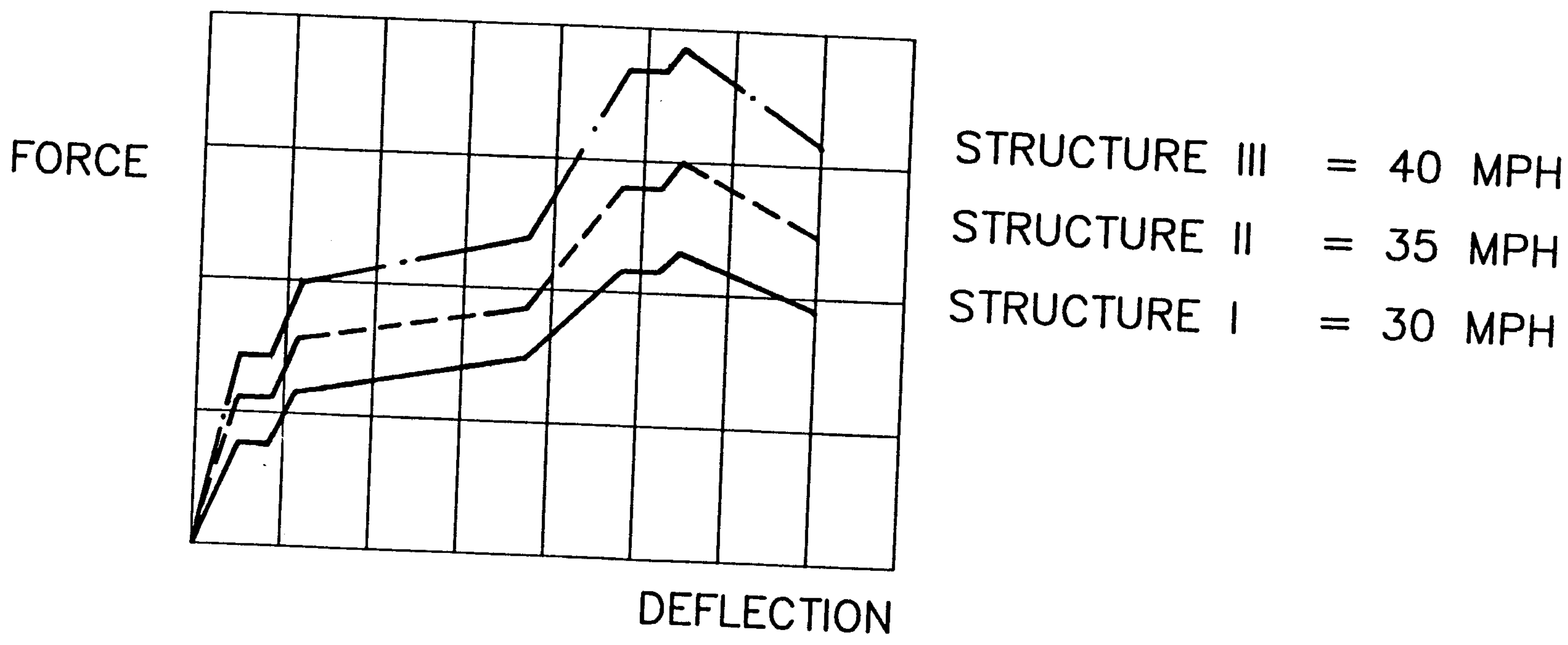

PRINCIPLE DRAWING

RESEARCH MIV
MODIFIED INTEGRATED VEHICLE

FIG.27

STRUCTURE I

30 MPH FIXED BARRIER IMPACT,(a,s)=f(t)

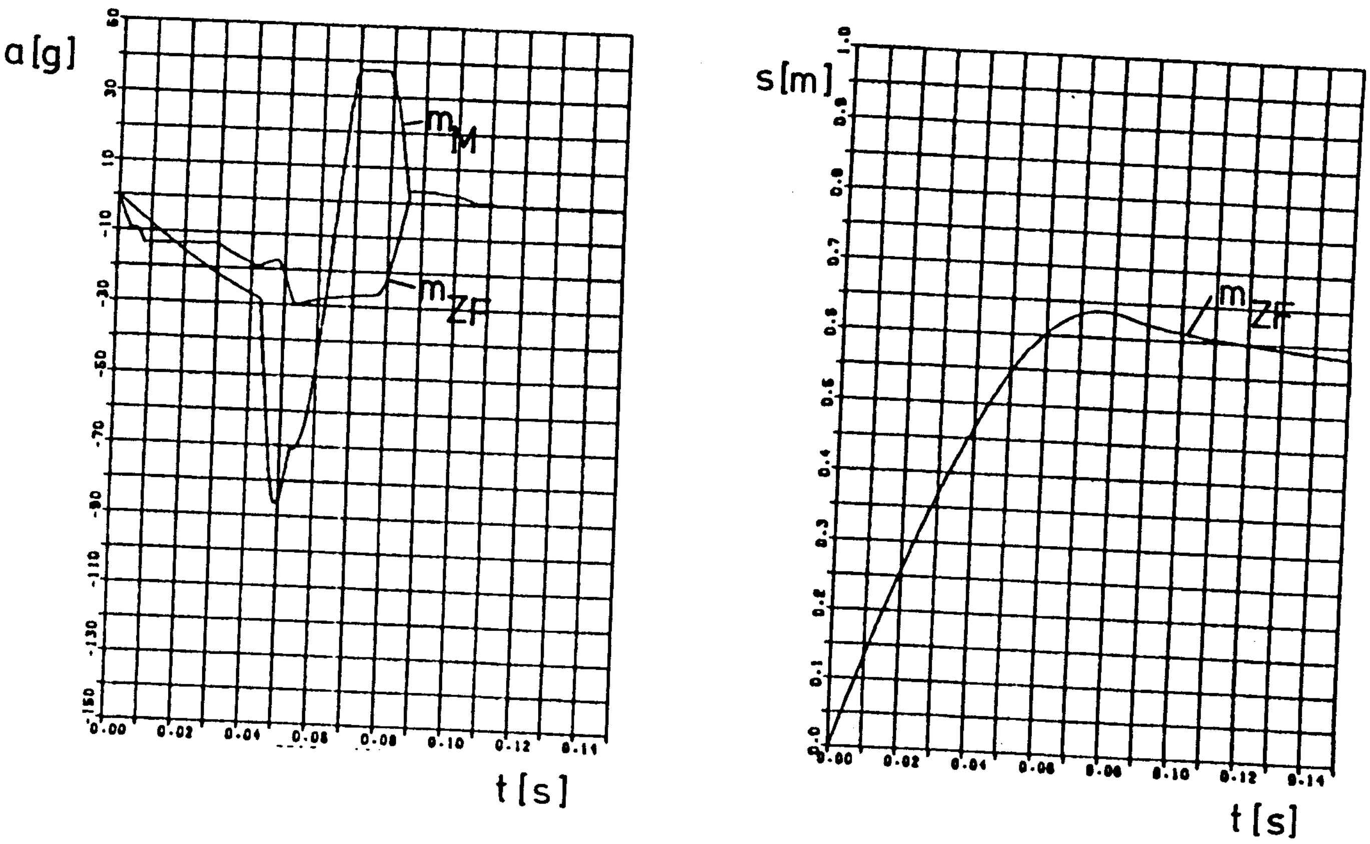

RESEARCH MIV

MODIFIED INTEGRATED VEHICLE

FIG.28

STRUCTURE II

35 MPH FIXED BARRIER IMPACT,(a,s)=f(t)

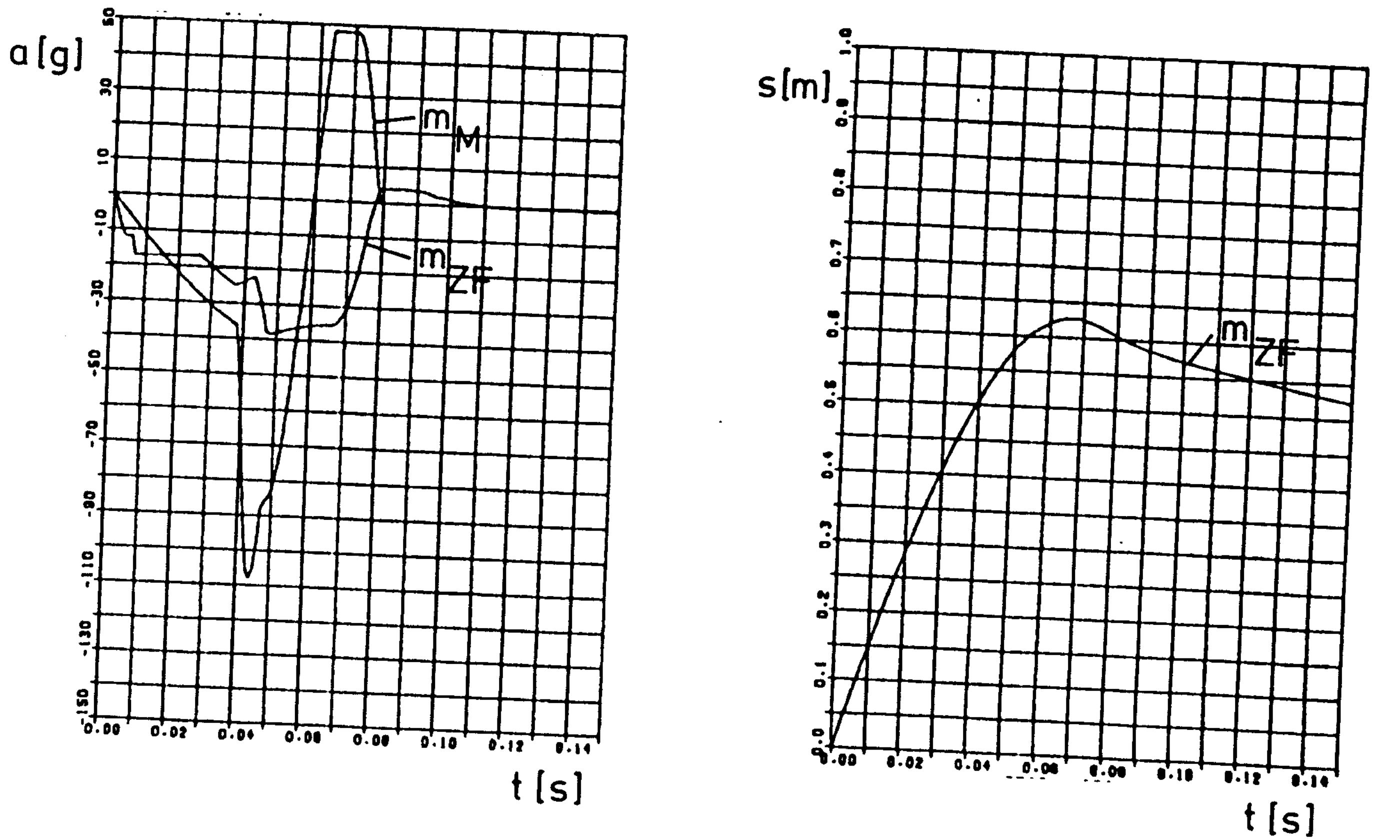

RESEARCH MIV

MODIFIED INTEGRATED VEHICLE

FIG.29

STRUCTURE III

40 MPH FIXED BARRIER IMPACT,(a,s)=f(t)

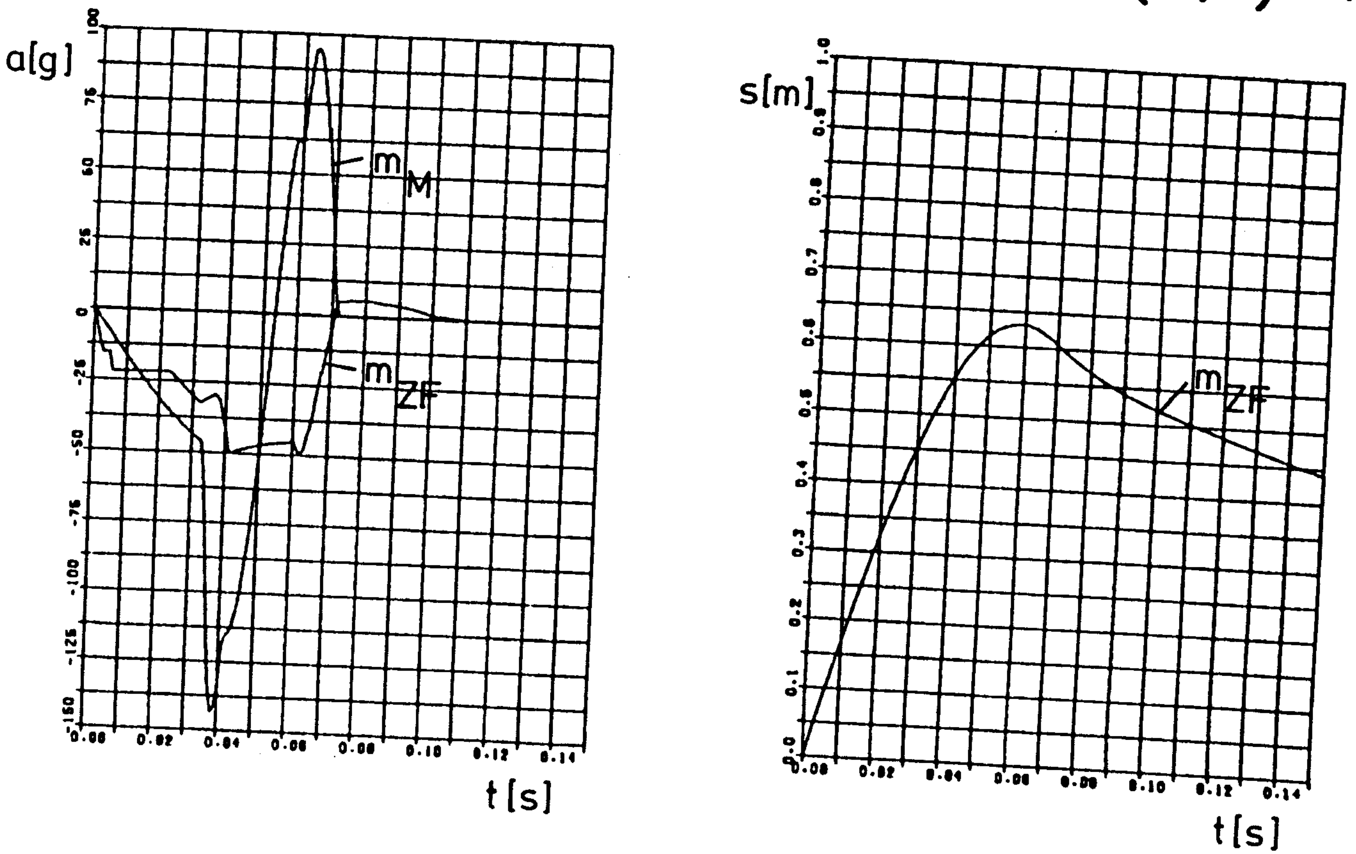

RESEARCH MIV

MODIFIED INTEGRATED VEHICLE

FIG.30

DUMMY RESPONSE DATA
EXPERIMENTAL AND COMPUTER SIMULATION

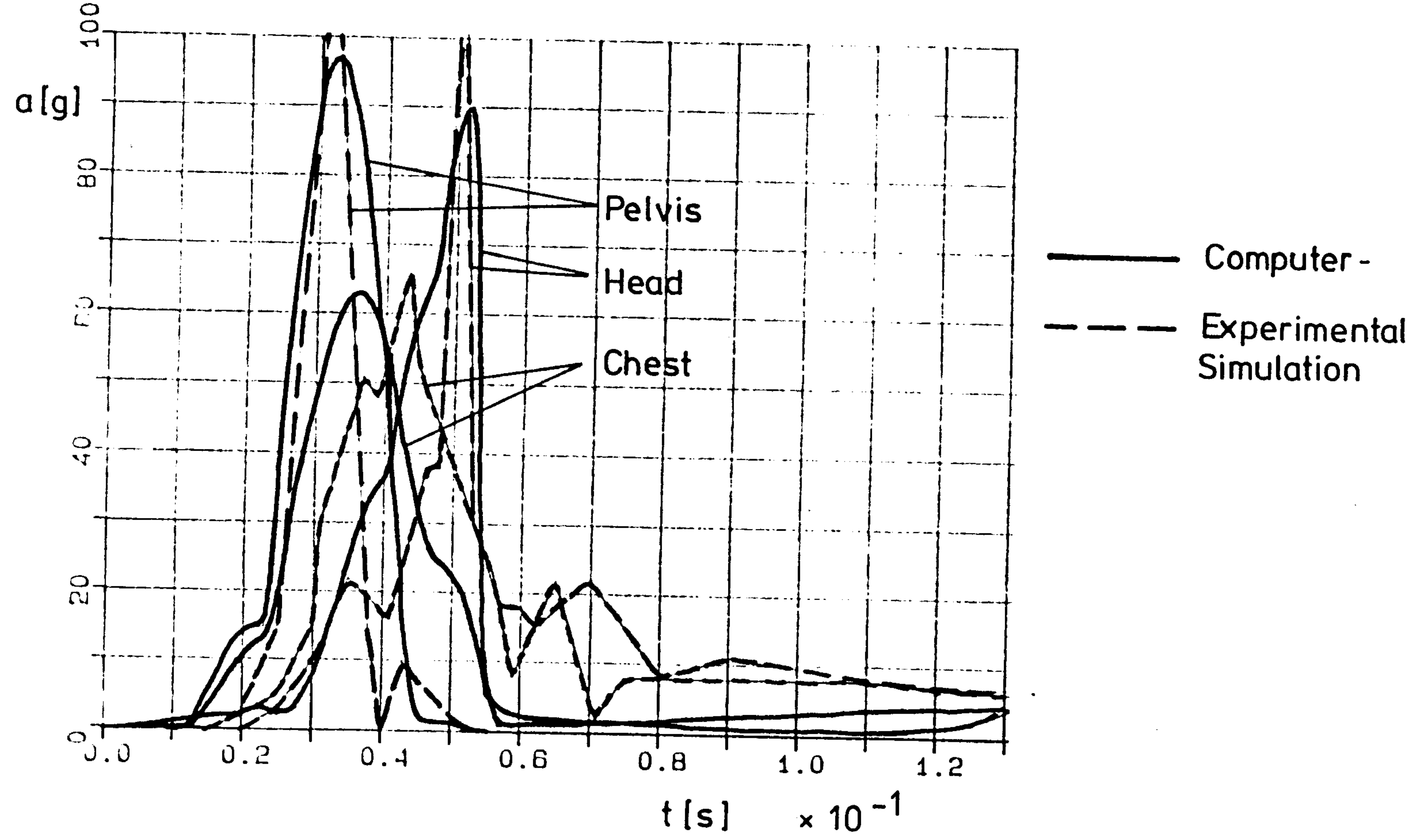

RESEARCH MIV

MODIFIED INTEGRATED VEHICLE

FIG.31

7.3 Qualitative Analysis of Striking Vehicle Parameters

To simulate the influence of structure, mass and bumper/longitudinal frame member height of the striking vehicle on dummy loads of the struck vehicle the following values were established for the computer model related masses and F/D characteristics, Tables 17, a to g.

According to the 3 different frontal structure layouts for the 30, 35 and 40 mph fixed barrier impacts with 2000, 3000 and 4000 lbs vehicles, there are 9 different F/D characteristics for striking vehicles impacting the 2000 lbs vehicle. The test weight of the vehicle during the head-on fixed barrier impact and not the vehicle's subsequent laden weight determines the frontal F/D characteristics.

The relative deflections and associated deformation forces for each structual element are specified. Together with the front structural Matrix, the side structural Matrix of the 2000 lbs car, the mass Matrix and the dummy and restraint system Matrix are tabulated.

The characteristics of the simulated dummies have been partially evaluated by the Technical University of Berlin. Some have been supplied by NHTSA. For side impacts the characteristics of the chest and pelvis have been calculated by adding the two characteristics for the padding and dummy, according to the computer model (Figure 32).

COMPONENT-MASS (kg)	VEHICLE MASS (lbs) 2000	3000	4000
FRONT			
COMPARTMENT	520.00	782.00	1044.00
UPPER FRONT	23.00	35.00	47.00
LOWER FRONT	157.00	235.00	313.00
ENGINE	200.00	298.00	396.00
SIDE			
COMPARTMENT	874.00	1324.00	1774.00
UPPER SIDE	17.00	17.00	17.00
LOWER SIDE	9.00	9.00	9.00

Table 17: Computer Model Input Data,
Mass Matrix

FRONT F/D CHARACTERISTICS OF 2000 LBS VEHICLE

	POINT	(1)	(2)	(3)	(4)	(5)	(6)	REBOUND GRADIENT (N/M)
COMPARTMENT-	FORCE (N)	0.	0.	23750.	23750.			7125000.0
UPPER FRONT (FZFO)	DEFL. (M)	0.000	0.114	0.122	0.800			
COMPARTMENT-	FORCE (N)	0.	0.	76000.	76000.	1843000.		7125000.0
ENGINE (FZMO)	DEFL. (M)	0.000	0.001	0.032	0.198	0.446		
ENGINE-	FORCE (N)	0.	0.	68400.	1805000.			4744808.7
LOWER FRONT (FMFU)	DEFL. (M)	0.000	0.001	0.450	0.816			
COMPARTMENT-	FORCE (N)	0.	57000.	57000.	95000.	42750.	42750.	7125000.0
LOWER FRONT (FZFU)	DEFL. (M)	0.000	0.048	0.214	0.270	0.648	0.800	

FRONT F/D CHARACTERISTICS OF 3000 LBS VEHICLE

COMPARTMENT-	FORCE (N)	0.	0.	31610.	31610.			8164781.3
UPPER FRONT (FZFO)	DEFL. (M)	0.000	0.093	0.101	0.800			
COMPARTMENT-	FORCE (N)	0.	0.	109000.	109000.	2721730.		8164781.3
ENGINE (FZMO)	DEFL. (M)	0.000	0.001	0.022	0.200	0.520		
ENGINE-	FORCE (N)	0.	0.	81750.	2725000.			5450000.0
LOWER FRONT (FMFU)	DEFL. (M)	0.000	0.001	0.500	0.985			
COMPARTMENT-	FORCE (N)	0.	70850.	70850.	125350.	69760.	69760.	8164781.3
LOWER FRONT (FZFU)	DEFL. (M)	0.000	0.053	0.367	0.480	0.700	0.800	

Table 17a: Front Structure Matrix, 30 MPH Layout

FRONT F/D CHARACTERISTICS OF 4000 LBS VEHICLE

	POINT	(1)	(2)	(3)	(4)	(5)	(6)	REBOUND GRADIENT (N/M)
COMPARTMENT- UPPER FRONT (FZFO)	FORCE (N)	0.	0.	42340.	42340.			10936312.5
	DEFL. (M)	0.000	0.093	0.101	0.800			
COMPARTMENT- ENGINE (FZMO)	FORCE (N)	0.	0.	146000.	146000.	3645620.		10936312.5
	DEFL. (M)	0.000	0.001	0.022	0.200	0.520		
ENGINE- LOWER FRONT (FMFU)	FORCE (N)	0.	0.	109500.	3650000.			7300000.0
	DEFL. (M)	0.000	0.001	0.500	0.985			
COMPARTMENT- LOWER FRONT (FZFU)	FORCE (N)	0.	94900.	94900.	167900.	93440.	93440.	10936312.5
	DEFL. (M)	0.000	0.053	0.367	0.480	0.700	0.800	

SIDE F/D CHARACTERISTICS OF 2000 LBS VEHICLE

	POINT	(1)	(2)	(3)	(4)	(5)	REBOUND GRADIENT (N/M)
COMPARTMENT- UPPER SIDE (FZSO)	FORCE (N)	0.	0.	44000.			1875000.0
	DEFL. (M)	0.000	0.066	0.500			
COMPARTMENT- LOWER SIDE (FZSU)	FORCE (N)	0.	600.	85000.	70000.	220000.	1875000.0
	DEFL. (M)	0.000	0.010	0.100	0.500	0.580	
DUMMY CHEST + PADDING	FORCE (N)	0.	0.	3500.	3500.	60000.	204710.1
	DEFL. (M)	0.000	0.150	0.236	0.256	0.532	
DUMMY PELVIS + PADDING	FORCE (N)	0.	500.	4500.	4500.	61000.	601063.8
	DEFL. (M)	0.000	0.150	0.209	0.239	0.333	

Table 17b: Front Structure Matrix, 30 MPH Layout
Side Structure Matrix of the 2000 lbs Car

```
DUMMY DATA

 MASS      PELVIS  CHEST   HEAD    (KG),   MOMENT OF INERTIA CHEST  HEAD     (KG*M**2)
             30.80   26.40   5.20                              .386   .050
 LENGHT      CHEST C.G.-PELVIS     NECK-PELVIS        HEAD-NECK    (M);   HEAD RADIUS   RKO  (M)
                  .230                 .400                .180                    .125
 INITIAL ANGLE CHEST-PELVIS  ABO =  19.0 (GRAD)
 INITIAL ANGLE HEAD-CHEST    AKO = -20.0 (GRAD)

MOMENTUM CHARACTERISTICS HEAD-(CHEST), CHEST-(PELVIS)
MOMENTUM        GRADIENT   (NM/GRAD)  RELATIVE ANGLE  (GRAD);        FRICTION MOMENTUM    GRADIENT (NMS/RAD)  ANGULAR VELOCITY (1/S)
FRONT - HEAD    4.97440    10.03560      90.00        -60.00                               30.00                .436
        CHEST   4.97440    10.03560      -2.00        -86.00                               95.00                .524
SIDE  - HEAD    5.93394     5.93394      30.00        -30.00                               20.00                .349
        CHEST   3.49090     3.49090      20.00        -20.00                               50.00                .349
RELATIVE ANGLE  (T=0.),  HEAD   39.00 (GRAD),  CHEST -19.00 (GRAD)

RESTRAINT SYSTEM

 BELT CHARACTERISTICS    CHEST   FGRTBR (N)     0.         0.      8000.     10000.     21000.
                                 SGRTBR (M)  0.0000      .0800     .1700      .4100      .5300     GRADIENT    91666.7 (N/M)
                         PELVIS  FGRTBE (N)     0.      3000.     12000.     18000.     27000.
                                 SGRTBE (M)  0.0000      .0800     .2300      .5300      .5800     GRADIENT   180000.0 (N/M)

HEAD CONTACT

 POSITION DUMMY-STEERING WHEEL      XLD   =   .225 (M)
                                    YLD   =  0.000
 WHEEL GRADIENT                     ALENK = 62.500 (GRAD)
 CHARACTERISTIC HEAD-STEERING WHEEL FLKD  =  0.000      3704.      3704.      7994.  (N)
                                    SLKD  =  0.000      .0095      .1500      .1600  (M)        GRADIENT   429000.0 (N/M)
 POSITION DUMMY-SIDE                XST   =   .450 (M)
 SIDE GRADIENT                      ASEIT = 95.000 (GRAD)
```

Table 17c: Dummy and Restraint System Matrix

FRONT F/D CHARACTERISTICS OF 2000 LBS VEHICLE

	POINT	(1)	(2)	(3)	(4)	(5)	(6)	REBOUND GRADIENT (N/M)
COMPARTMENT-	FORCE (N)	0.	0.	30400.	30400.			9120000.0
UPPER FRONT (FZFO)	DEFL. (M)	0.000	0.114	0.122	0.800			
COMPARTMENT-	FORCE (N)	0.	0.	97280.	97280.	2359040.		9120000.0
ENGINE (FZMO)	DEFL. (M)	0.000	0.001	0.032	0.198	0.446		
ENGINE-	FORCE (N)	0.	0.	87552.	2310400.			6073355.2
LOWER FRONT (FMFU)	DEFL. (M)	0.000	0.001	0.450	0.816			
COMPARTMENT-	FORCE (N)	0.	72960.	72960.	121600.	54720.	54720.	9120000.0
LOWER FRONT (FZFU)	DEFL. (M)	0.000	0.048	0.214	0.270	0.648	0.800	

FRONT F/D CHARACTERISTICS OF 3000 LBS VEHICLE

	POINT	(1)	(2)	(3)	(4)	(5)	(6)	REBOUND GRADIENT (N/M)
COMPARTMENT-	FORCE (N)	0.	0.	40461.	40461.			10450920.0
UPPER FRONT (FZFO)	DEFL. (M)	0.000	0.093	0.101	0.800			
COMPARTMENT-	FORCE (N)	0.	0.	139520.	139520.	3483814.		10450920.0
ENGINE (FZMO)	DEFL. (M)	0.000	0.001	0.022	0.200	0.520		
ENGINE-	FORCE (N)	0.	0.	104640.	3488000.			6976000.0
LOWER FRONT (FMFU)	DEFL. (M)	0.000	0.001	0.500	0.985			
COMPARTMENT-	FORCE (N)	0.	90688.	90688.	160448.	89293.	89293.	10450920.0
LOWER FRONT (FZFU)	DEFL. (M)	0.000	0.053	0.367	0.480	0.700	0.800	

Table 17d: Front Structure Matrix, 35 MPH Layout

FRONT F/D CHARACTERISTICS OF 4000 LBS VEHICLE

	POINT	(1)	(2)	(3)	(4)	(5)	(6)	REBOUND GRADIENT (N/M)
COMPARTMENT- UPPER FRONT (FZFO)	FORCE (N)	0.	0.	54195.	54195.			13998480.0
	DEFL. (M)	0.000	0.093	0.101	0.800			
COMPARTMENT- ENGINE (FZMO)	FORCE (N)	0.	0.	186880.	186880.	4666394.		13998480.0
	DEFL. (M)	0.000	0.001	0.022	0.200	0.520		
ENGINE- LOWER FRONT (FMFU)	FORCE (N)	0.	0.	140160.	4672000.			9344000.0
	DEFL. (M)	0.000	0.001	0.500	0.985			
COMPARTMENT- LOWER FRONT (FZFU)	FORCE (N)	0.	121472.	121472.	214912.	119603.	119603.	13998480.0
	DEFL. (M)	0.000	0.053	0.367	0.480	0.700	0.800	

Table 17e: Front Structure Matrix, 35 MPH Layout

FRONT F/D CHARACTERISTICS OF 2000 LBS VEHICLE

	POINT	(1)	(2)	(3)	(4)	(5)	(6)	REBOUND GRADIENT (N/M)
COMPARTMENT-	FORCE (N)	0.	0.	34675.	34675.			10402500.0
UPPER FRONT (FZFO)	DEFL. (M)	0.000	0.114	0.122	0.800			
COMPARTMENT-	FORCE (N)	0.	0.	110960.	110960.	2690780.		10402500.0
ENGINE (FZMO)	DEFL. (M)	0.000	0.001	0.032	0.198	0.446		
ENGINE-	FORCE (N)	0.	0.	99864.	2635300.			6927420.8
LOWER FRONT (FMFU)	DEFL. (M)	0.000	0.001	0.450	0.816			
COMPARTMENT-	FORCE (N)	0.	83220.	83220.	138700.	62415.	62415.	10402500.0
LOWER FRONT (FZFU)	DEFL. (M)	0.000	0.048	0.214	0.270	0.648	0.800	

FRONT F/D CHARACTERISTICS OF 3000 LBS VEHICLE

	POINT	(1)	(2)	(3)	(4)	(5)	(6)	REBOUND GRADIENT (N/M)
COMPARTMENT-	FORCE (N)	0.	0.	46151.	46151.			11920580.6
UPPER FRONT (FZFO)	DEFL. (M)	0.000	0.093	0.101	0.800			
COMPARTMENT-	FORCE (N)	0.	0.	159140.	159140.	3973726.		11920580.6
ENGINE (FZMO)	DEFL. (M)	0.000	0.001	0.022	0.200	0.520		
ENGINE-	FORCE (N)	0.	0.	119355.	3978500.			7957000.0
LOWER FRONT (FMFU)	DEFL. (M)	0.000	0.001	0.500	0.985			
COMPARTMENT-	FORCE (N)	0.	103441.	103441.	183011.	101850.	101850.	11920580.6
LOWER FRONT (FZFU)	DEFL. (M)	0.000	0.053	0.367	0.480	0.700	0.800	

Table 17f: Front Structure Matrix, 40 MPH Layout

FRONT F/D CHARACTERISTICS OF 4000 LBS VEHICLE

	POINT	(1)	(2)	(3)	(4)	(5)	(6)	REBOUND GRADIENT (N/M)
COMPARTMENT- UPPER FRONT (FZFO)	FORCE (N)	0.	0.	61816.	61816.			15967016.3
	DEFL. (M)	0.000	0.093	0.101	0.800			
COMPARTMENT- ENGINE (FZMO)	FORCE (N)	0.	0.	213160.	213160.	5322605.		15967016.3
	DEFL. (M)	0.000	0.001	0.022	0.200	0.520		
ENGINE- LOWER FRONT (FMFU)	FORCE (N)	0.	0.	159870.	5329000.			10658000.0
	DEFL. (M)	0.000	0.001	0.500	0.985			
COMPARTMENT- LOWER FRONT (FZFU)	FORCE (N)	0.	138554.	138554.	245134.	136422.	136422.	15967016.3
	DEFL. (M)	0.000	0.053	0.367	0.480	0.700	0.800	

Table 17g: Front Structure Matrix, 40 MPH Layout

BASIC LATERAL F/D CHARACTERISTICS OF 2000 LBS VEHICLE AND DUMMY

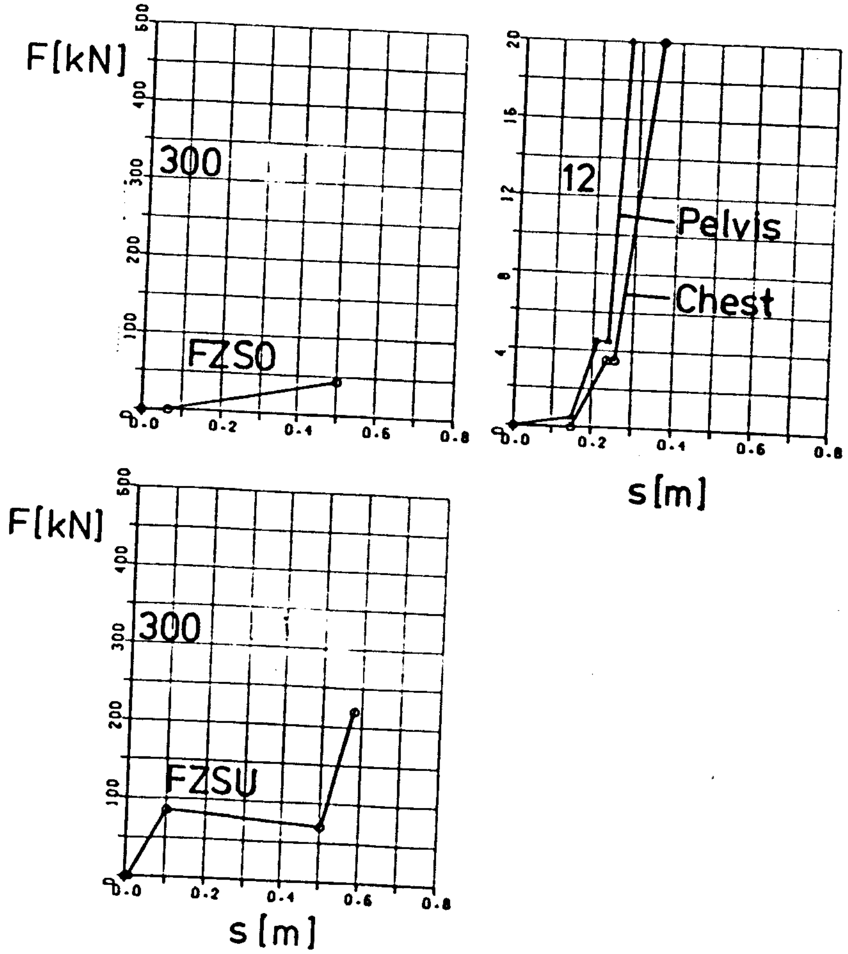

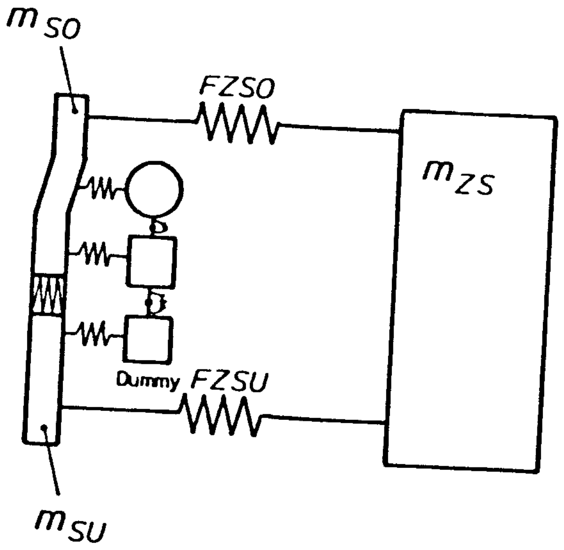

RESEARCH MIV
MODIFIED INTEGRATED VEHICLE

FIG.32

7.3.1 Front Structure F/D Characteristics, Curb Weight and Load of the Striking Vehicle

The influence of the priviously mentioned 9 different frontal structures, which were selected, have on dummy loads and side structure deformation in 90° side impacts with 30 mph can be seen in Table 18.

The values relate to the 2000 lbs vehicle struck by the 2000, 3000 or 4000 lbs vehicle.

The reference values in the right column are those of test 10 with the 27° crabbed Citation and the baseline vehicle. The dummy loads of the simulated side impact with a 3000 lbs striking and a 2000 lbs struck vehicle are within the range of this baseline test.

The computer simulation results clearly demonstrate the increasing front structure aggressiveness if the curb weight of the striking vehicle and/or the layout velocity is increased for the fixed barrier impact.

The increase of dummy loads during head-on fixed barrier impacts along with the increasing stiffness of the 35 and 40 mph layout compared to the 30 mph layout is shown in Table 19. In each case the same dummy and restraint parameters were used.

To reduce the HIC values for the 35 mph layout to FMVSS 208 limits it was necessary to modify the frontal structure in order to achieve a more rectangular F/D characteristic and to reduce the belt slack by 3 cm, Tables 20, 20a.

This concept, however, leads to a further increase of frontal structure aggressiveness, Table 21. The increase of dummy loads in simulated side impacts is evident with the 2000 lbs striking vehicle. There is nearly no change if the 4000 lbs vehicle is pared with the 2000 lbs vehicle.

The explanation is, that the simulated dummy has only a certain resistance, so that the dummy response, even in the chest and pelvic area, will be front structure sensitive only up to a certain force level. The increase of side structure deformation can be seen in each case.

The laden weight of the striking vehicle has a minor effect on dummy loads (Table 22). An additional load of 450 or 900 lbs was simulated.

30 MPH SIDE IMPACTS, 9 DIFFERENT FRONT STRUCTURES

DUMMY LOADS AND DEFORMATIONS OF 2000 LBS STRUCK VEHICLE

FRONT STRUCTURE LAYOUT / STRIK. VEH. [lbs]	v [mph]	2000	3000^{x}	4000	REFERENCE $TEST^{x}$
HEAD HIC	30	183	490	975	406
	35	248	833	1480	
	40	369	866	1780	
a CHEST (3ms) [g]	30	43	62	76	59
	35	54	70	84	
	40	61	75	88	
a PELVIS (3ms) [g]	30	63	96	117	116
	35	85	109	126	
	40	98	116	129	
SIDE STRUCTURE DEFORMATION s_{max} [mm]	30	273	374	453	411
	35	324	408	476	
	40	341	422	489	

RESEARCH MIV

MODIFIED INTEGRATED VEHICLE

TAB.18

HEAD—ON FIXED BARRIER IMPACTS WITH 9 DIFFERENT FRONT STRUCTURES

REDUCTION OF DUMMY LOADS WITH MORE RECTANGULAR F/D CHARACTERISTICS

FRONT STRUCTURE LAYOUT	STRIK. VEH. [lbs] / v [mph]	FRONT STRUCTURE CHARACTERISTICS					
		TENDENCY: TRIANGULAR			TENDENCY: RECTANGULAR		
		2000	3000	4000	2000	3000	4000
HEAD HIC	30	737	778	800	990	930	940
	35	1262	1328	1369			
	40	2134	2450	2467			
a CHEST (3ms) [g]	30	42	42	42	45	45	45
	35	45	45	45			
	40	54	60	60			
a PELVIS (3ms) [g]	30	42	42	42	43	42	42
	35	44	45	45			
	40	53	56	57			

RESEARCH MIV
MODIFIED INTEGRATED VEHICLE

TAB.19

FRONT F/D CHARACTERISTICS OF 2000 LBS VEHICLE

	POINT	(1)	(2)	(3)	(4)	(5)	(6)	REBOUND GRADIENT (N/M)
COMPARTMENT-	FORCE (N)	0.	0.	28500.	28500.			
UPPER FRONT (FZFO)	DEFL. (M)	0.000	0.114	0.122	0.800			8550000.0
COMPARTMENT-	FORCE (N)	0.	0.	91200.	91200.	2211600.		
ENGINE (FZMO)	DEFL. (M)	0.000	0.001	0.032	0.198	0.446		8550000.0
ENGINE-	FORCE (N)	0.	0.	82080.	2166000.			
LOWER FRONT (FMFU)	DEFL. (M)	0.000	0.001	0.450	0.816			5693770.5
COMPARTMENT-	FORCE (N)	0.	60000.	120000.	70000.	70000.	70000.	
LOWER FRONT (FZFU)	DEFL. (M)	0.000	0.050	0.100	0.600	0.650	0.800	8550000.0

FRONT F/D CHARACTERISTICS OF 3000 LBS VEHICLE

COMPARTMENT-	FORCE (N)	0.	0.	37932.	37932.			
UPPER FRONT (FZFO)	DEFL. (M)	0.000	0.093	0.101	0.800			9797737.5
COMPARTMENT-	FORCE (N)	0.	0.	130800.	130800.	3266076.		
ENGINE (FZMO)	DEFL. (M)	0.000	0.001	0.022	0.200	0.520		9797737.5
ENGINE-	FORCE (N)	0.	0.	98100.	3270000.			
LOWER FRONT (FMFU)	DEFL. (M)	0.000	0.001	0.500	0.985			6540000.0
COMPARTMENT-	FORCE (N)	0.	60000.	140000.	100000.	100000.	100000.	
LOWER FRONT (FZFU)	DEFL. (M)	0.000	0.050	0.100	0.650	0.700	0.800	9797737.5

Table 20: Front Structure Matrix, 35 MPH Layout, 2000 and 3000 lbs Vehicles. Design Tendency: Rectangular Characteristics

FRONT F/D CHARACTERISTICS OF 4000 LBS VEHICLE

	POINT	(1)	(2)	(3)	(4)	(5)	(6)	REBOUND GRADIENT (N/M)
COMPARTMENT-	FORCE (N)	0.	0.	50808.	50808.			13123575.0
UPPER FRONT (FZFO)	DEFL. (M)	0.000	0.093	0.101	0.800			
COMPARTMENT-	FORCE (N)	0.	0.	175200.	175200.	4374744.		13123575.0
ENGINE (FZMO)	DEFL. (M)	0.000	0.001	0.022	0.200	0.520		
ENGINE-	FORCE (N)	0.	0.	131400.	4380000.			8760000.0
LOWER FRONT (FMFU)	DEFL. (M)	0.000	0.001	0.500	0.985			
COMPARTMENT-	FORCE (N)	0.	60000.	164000.	124000.	124000.	124000.	13123575.0
LOWER FRONT (FZFU)	DEFL. (M)	0.000	0.050	0.100	0.650	0.700	0.800	

Table 20a: Front Structure Matrix, 35 MPH Layout, 4000 lbs Vehicle
Design Tendency: Rectangular Characteristics

30 MPH SIDE IMPACTS, TRI– AND RECTANG. FR. STRUCT. F/D CHAR.

DUMMY LOADS AND DEFORMATIONS OF 2000 LBS STRUCK VEHICLE

FRONT STRUCTURE LAYOUT \ STRIK. VEH. [lbs]	v [mph]	FRONT STRUCTURE CHARACTERISTICS					
		TENDENCY: TRIANGULAR			TENDENCY: RECTANGULAR		
		2000	3000	4000	2000	3000	4000
HEAD HIC	30 35 40	248	833	1480	669	851	1412
a_{CHEST} (3ms) [g]	30 35 40	54	70	84	69	78	82
a_{PELVIS} (3ms) [g]	30 35 40	85	109	126	102	105	109
SIDE STRUCTURE DEFORMATION s_{max} [mm]	30 35 40	324	408	476	369	444	505

RESEARCH MIV

MODIFIED INTEGRATED VEHICLE

TAB.21

30 MPH SIDE IMPACTS, LOADED AND UNLOADED STRIKING VEHICLE

DUMMY LOADS OF 2000 LBS STRUCK VEHICLE

	STRIK. VEH. [lbs] / LOAD [lbs]	2000	3000	4000
HEAD HIC	0	183	490	975
	450	295	534	1102
	900	392	572	1118
a CHEST (3ms) [g]	0	43	62	76
	450	43	63	76
	900	44	64	77
a PELVIS (3ms) [g]	0	63	96	117
	450	65	96	118
	900	65	96	118

RESEARCH MIV
MODIFIED INTEGRATED VEHICLE

TAB.22

7.3.2 Bumper and Longitudinal Frame Member Height of the Striking Vehicle

The objective of this qualitative analysis was to demonstrate the influence of the bumper and longitudinal frame member height of the striking vehicle on dummy loads and side structure deformation during a 90^o side impact at 30 mph.

The bumper heights investigated were within the range of 300 and 500 mm. Not only the bumper heights but also those of the longitudinal beams of the front structure have been taken into account, because both will influence vehicle and dummy loads. Computer runs have been performed with the bumper and longitudinal frame member heights of 300, 350, 400, 450 and 500 mm.

In order to validate the computer program and to establish the bumper height dependent interaction of frontal and lateral structures, the baseline tests 10 and 13 without and with bumper/sill engagement were utilized. The results of experimental and computer simulation are shown in Tabel 23.

The different bumper and longitudinal frame member heights mainly influence the side structure reaction force and the roll behavior of the struck vehicle. The extreme values are established by the data obtained from tests 10 and 13 with nearly 500 and 300 mm bumper heights. The reaction force of the upper and lower side structures is nearly 30 % higher with bumper/sill engagement compared with the 500 mm bumper height. It was estimated that with half bumper/sill engagement (350 mm) the force increase amounts only to 24 %. Overriding the sill the force level is only 6 % with 400 mm and 3 % with 450 mm bumper height higher than in test 10.

The roll behavior of the struck vehicle on dummy loads is caused by the distance between resultant impact force and the center of gravity of the struck vehicle. It was simulated by increasing the side structure stiffness, as mentioned, and decreasing the dummy/padding F/D characteristics by lowering the bumper height. The computer simulation results are shown in Table 24.

Lateral 90° impacts at 30 mph are simulated with a 3000 lbs vehicle striking a 2000 lbs vehicle. Except for the HIC values there is a continuing decrease of the chest and pelvic loads of the dummy and a reduction of the side structure deformation with decreasing bumper height. With the defined structural characteristics the lowest HIC value was calculated with a 400 mm bumper height.

EXPERIMENTAL AND COMPUTER SIMULATION, COMPARISON OF RESULTS

VALUE	TEST 10	SIMULATION TEST 10	TEST 13	SIMULATION TEST 13
HEAD HIC	406	490	200	303
a_{CHEST} (3ms) [g]	60	62	30	34
a_{PELVIS} (3ms) [g]	116	96	45	50
SIDE STRUCTURE DEFORM. $s_{MAX.}$ [mm]	410	374	265	251
$t_{a_{HEAD}}$ [ms]	50	50	64	70
$t_{a_{CHEST}}$ [ms]	30	30	70	48

RESEARCH MIV
MODIFIED INTEGRATED VEHICLE

TAB.23

30 MPH SIDE IMPACTS, DIFFERENT BUMPER HEIGHTS

DUMMY LOADS AND DEFORMATIONS OF 2000 LBS STRUCK VEHICLE

BUMPER AND LONGIT. FRAME MEMBERS HEIGHT [mm]	HEAD HIC	a (3 ms) [g]		SIDE STRUCTURE DEFORMATION $s_{max.}$ [mm]
		CHEST	PELVIS	
300	303	34	50	251
350	291	42	63	269
400	253	58	91	351
450	335	59	95	367
500	482	59	100	382

RESEARCH MIV

MODIFIED INTEGRATED VEHICLE

TAB.24

8. Summary

In Phase I of this project, VW AG examined approaches which appear technically feasible for the 30 mph side impact with the 19° crabbed barrier and the 35 mph head-on fixed barrier impact under the following limiting conditions:

a) Maximum additional weight for the new structure and restraint system modifications: $\Delta G = 20$ lbs

b) Maximum padding thickness without widening the vehicle, considering seat positioning and contact by the 95 % male dummy

c) To achieve the greatest possible reduction in dummy loads

d) Maintaining the objective that the design be suited to mass production.

The objective of Phase II was to investigate the effectiveness of the MIV measures developed in Phase I under different test configurations, test parameters and with the crabbed Chevrolet Citations as striking vehicles.

In addition to this experimental side impact simulation program, VW was requested to analyze through computer simulation the influence of the F/D characteristics, vehicle curb weight and load as well as the bumper and longitudinal frame member height of the striking vehicle on side impact protection.

8.1 Tests Performed

In Phase I initial tests were carried out with the baseline vehicle and the 19° crabbed barrier to constitute the basis for modifications to be derived to meet the requirement for increased passive safety in the defined impact configurations.

Five side impact tests were run with the 4 door baseline vehicle at 30, 35 und 40 mph to ascertain dummy response at increasing test velocities.

Two were conducted with the baseline vehicle at 30 and 40 mph in order to evaluate scatter in vehicle deformation and dummy loading.

One side impact was conducted at 30 mph in order to evaluate the performance of the MIV. In addition, one side impact test each was conducted with MIV "Integrated Structure" only and MIV padding only to demonstrate the influence of the individual MIV components.

One head-on fixed barrier impact at 35 mph demonstrates the effect of the MIV structure in conjunction with increased frontal impact requirements.

The effectiveness of the MIV vehicle layout was evaluated in Phase II with Citation/baseline vehicle and MIV side impact tests at 60 and 90 degree impact angle at 40 and 34 mph impact velocity respectively. The crabbed angles of the Citations were 19 and 27 degrees. The impact point of the left corner of the Citation was between A-pillar and front wheel and not between A- and B-pillars as it was in Phase I.

In addition to these tests, one side impact test with bumper/sill engagement was run with the 27° crabbed Citation and the baseline vehicle to investigate the influence of the bumper and longitudinal frame member height of the striking vehicle on dummy loads and to validate the computer side impact simulation program.

8.2 MIV Project Results

Comparison of the Phase I side impact tests 2,5,7 and 8 at the same test velocity with baseline vehicle, MIV vehicles and components clearly demonstrates that the best overall results in reduction of dummy loads were achieved with the combination of MIV structure and MIV padding (Table 25 and Figures 12, 15 and 17). It must be noted, however, that the padding configuration utilized in Phase I was not quantitatively assessed relative to a reduction of occupant comfort and impairment of vehicle operability.

Evaluation of all Phase I baseline tests (Table 25 and Figure 7) demonstrates that the scatter of dummy loads is greater than the influence of test velocity. If tests 1 and 4 are excluded because of difficulties with the deformation element (test 4) and the new damper (test 1) modified by NHTSA, repetition of these tests is necessary in order to be able to provide more information about the magnitude of scatter. If evaluation is limited to tests 2, 3 and 6 an increase of dummy loads with higher impact velocity can be seen.

The head-on fixed barrier impact was carried out with the MIV at an impact velocity of 35 mph. The working principles of a refined passive restraint system and a refined steering system were tested in conjunction with the newly developed "Integrated Structure". The test results demonstrated compliance with all Federal Standards associated with the frontal fixed barrier impact.

The MIV measures are less effective in the upper dummy body regions, see tests 9 to 12 (Table 26 and Figures 20 and 21), Phase II. In contrast to the Phase I results, the MIV measures reduce the driver dummy loadings in Phase II mainly in the pelvic but less in the head and thoracic regions. This demonstrates that the MIV measures designed for a less severe crash condition of Phase I are less effective under the modified and generally more severe Phase II test conditions.

Driver dummy head impacts did not occur with the pillars or the roof frame in any of the tests performed. That is because the interaction of the dummy body parts with one another and the interaction of the thorax and pelvis with the inner door panel influences the kinematic of the dummy, and which in turn depends upon many parameters simulated by full-scale testing.

The highest reduction of dummy loads in the entire MIV project was achieved with the side impact test 13 with bumper/sill engagement (Table 26 and Figure 22), with only front structure modifications on the striking vehicle.

Computer Simulation Results

The qualitative analyses of striking vehicle parameters on side impact protection clearly demonstrate the increase of front structural aggressiveness with increasing vehicle curb weight and/or the fixed barrier layout velocity (Table 18).

The laden weight of the striking vehicle has a minor effect on dummy loads (Table 22). The reduction of dummy loads is evident with a reduction of the height of the bumper and longitudinal frame member of the striking vehicle (Table 23).

Test Configuration

Test Parameter

Dummy Loads

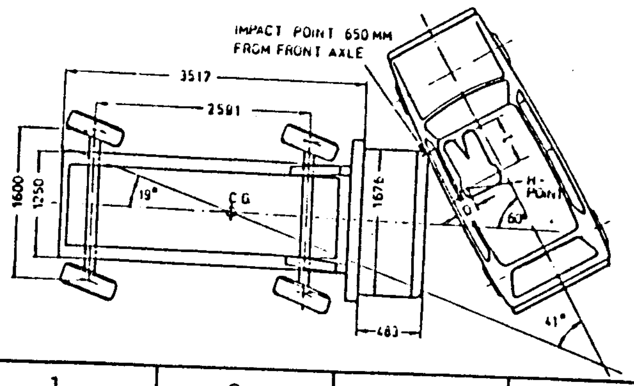

$$I = \frac{D + 6''}{0.8693} + 1.5\ (\pm 1.5'')$$ (D and I in inch)

Remarks: I = Impact Point
D = Distance Dummy-Door (Exterior)
CR = 19° Crabbed Barrier
PR = Production Rabbit
MIV = Modified Integrated Vehicle
PM = Padding Modification

Test - No.		1	2	3	4	5	6	7	8
Striking Vehicle		CB	CB	CB	CB	CB	CB	CB	CB
Struck Vehicle		PR	PR	PR	PR	MIV	PR	PR + PM	MIV - PM
Impact Velocity	(mph)	31.58	30.88	34.66	40.05	31.09	40.03	31.09	31.10
Head	H I C	462	441	577	594	274	599	384	def.
Left Upper Rib	$a_y \geq 3ms$ (g)	85	69	77	96	39	107	63	83
Left Lower Rib	$a_y \geq 3ms$ (g)	94	65	81	87	48	95	62	64
Upper Thorax (T 1)	$a_y \geq 3ms$ (g)	84	77	86	84	51	137	69	68
	$a_{Res} \geq 3ms$ (g)	86	78	88	84	51	137	70	77
	S I	623	588	903	925	393	1595	486	533
Lower Thorax (T 12)	$a_y \geq 3ms$ (g)	63	74	103	112	60	102	59	77
	$a_{Res} \geq 3ms$ (g)	63	75	105	114	60	102	64	81
Pelvis	$a_y \geq 3ms$ (g)	113	88	106	88	43	105	68	48
	$a_{Res} \geq 3ms$ (g)	113	88	107	88	43	110	71	52
	S I	1077	705	1469	776	304	1807	799	300

TABLE 25: COMPARISON OF SIDE IMPACT TEST RESULTS
DUMMY DRIVER LOADS

Test Configuration

Test Parameter

Dummy Loads

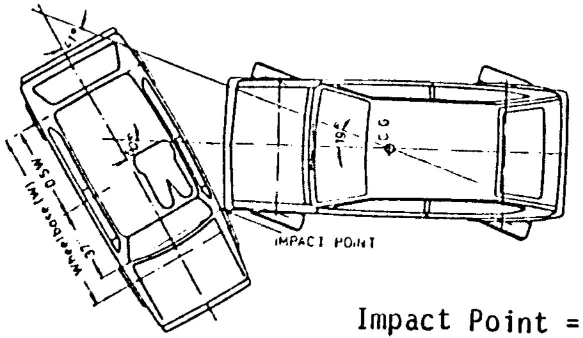

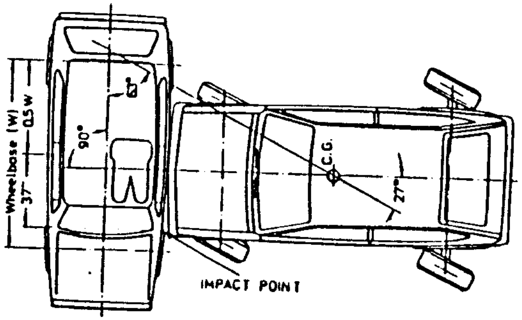

Impact Point = 260 mm from Front Axle

Remarks:

PR = Production Rabbit

MIV = Modified Integrated Vehicle

CC = Crabbed Citation

BS = Bumper-Sill Engagement

Test Parameter / Dummy Loads		9	10	11	12	13
Test - No.		9	10	11	12	13
Strik. Veh. / Impact Angle		19^0-CC / 60^0	27^0-CC / 90^0	19^0-CC / 60^0	27^0-CC / 90^0	27^0-CC / 90^0
Struck Vehicle		PR	PR	MIV	MIV	PR + BS
Impact Velocity	(mph)	39.99	35.43	39.8	33.8	33.8
Head	H I C	612	406	609	495	200
Left Upper Rib	$a_y \geq 3ms$ (g)	78	51	59	44	18
Left Lower Rib	$a_y \geq 3ms$ (g)	85	60	57	57	24
Upper Thorax (T 1)	$a_y \geq 3ms$ (g)	87	59	78	57	20
	$a_{Res} \geq 3ms$ (g)	91	59	79	58	30
	S I	788	370	705	459	133
Lower Thorax (T 12)	$a_y \geq 3ms$ (g)	91	86	67	60	22
	$a_{Res} \geq 3ms$ (g)	96	86	70	61	24
Pelvis	$a_y \geq 3ms$ (g)	172	116	71	77	43
	$a_{Res} \geq 3ms$ (g)	194	116	71	78	45
	S I	2994	1113	569	666	183

TABLE 26: COMPARISON OF SIDE IMPACT TEST RESULTS
DUMMY DRIVER LOADS

9. Conclusions

The specific goals established by NHTSA for the MIV project Phase I were met. The MIV measures demonstrate a promising potential for dummy load reduction in the lateral and frontal impacts defined in Phase I. The realization of NHTSA's project goals necessitated the development of an all-new "Integrated Structure;" a concept in which the greatest number of components is effective during the defined frontal and lateral impacts.

The dummy load reduction was achieved with a relatively low overall weight increase and in accordance with current mass production methods. Comfort and vehicle operability were not quantitatively assessed for the MIV padding utilized in Phase I of this project.

The padding utilized in Phase II was furnished by NHTSA. Occupant comfort and vehicle operability associated with this Phase II padding has reportedly been assessed by another contractor in a separate effort.

The MIV project results must be seen as limited to the HSRI side impact dummy as delivered by NHTSA for this project. Assessment of the biofidelity of the HSRI dummy has been performed in a number of other research efforts. One such assessment is presented in the FAT study and reported upon at the 9th ESV Conference in Kyoto and the 27th Stapp Car Chrash Conference in San Diego. The results of the MIV project, it must be noted, do not purport to deal with problems of simulation of occupant interaction in collision situations.

Considering secondary weight, which is necessarily required in order to correspondingly stiffen the load bearing structures and the chassis, the added weight of the MIV components amounts to 25 lbs. All of the requisite structural and secondary changes would result in a retail price increase of approximately DM 900, if the particular vehicle were modified during the production run. The price increase would be somewhat less, if the modifications were incorporated at the outset of the design and development process.

The estimated data relates to a specific vehicle with a specific engine/transmission concept from one manufacturer, without considering other concepts, as air conditioner, power steering, etc. No statements of a general nature can be derived from this test series at the present time. Furthermore, the crash results achieved refer in each case to only one test.

Further tests with a widened MIV incorporating MIV padding may need to be conducted to evaluate the effect of increased distance between dummy and side padding, required for comfort and vehicle operability for the Phase I padding, upon dummy loads and to test the Phase I results achieved with closer dummy/padding proximity. It must be emphasized that increase in overall vehicle width will necessarily effect vehicle weight, payload, aerodynamic drag and other coefficients, fuel consumption and possibly consumer acceptance.

The potential for dummy load reduction in the upper body regions is less under the more severe impact conditions of Phase II. These results indicate that further research is necessary in the complex field of side impact occupant protection to find a means of providing the best overall protection for the entire vehicle population and relevant collision types to justify incorporation of the MIV structures and components tested into production vehicles. It needs to be determined whether other measures will be more effective than the Phase I MIV measures. A promising step in this direction is shown with the experimental and computer simulation results of the reduced bumper and longitudinal frame member height of the striking vehicle.

In order to realize increased passive safety for the entire vehicle population, the side impact protection study should be expanded to various vehicle types considering:

- purchase price
- fuel consumption
- comfort
- vehicle operability
- compatibility
- economic use of resources.

In view of universally accepted considerations of fuel economy and economical use of resources, additional weight should only be incorporated in vehicles where associated advantages clearly outweigh all associated disadvantages and it is assumed that available restraints are used. The use of occupant restraints available today and required to be used in 30 countries, is a prerequisite for the achievement of increased passive safety through the incorporation of MIV structures.

Head-on fixed barrier impact at an increased velocity of 35 mph can otherwise lead to an overall decrease in passive safety levels if available restraints are not employed because MIV-type frontal structures developed under this contract will necessarily be stiffer and produce correspondingly higher loadings to the occupants of MIV-type vehicles in single vehicle impacts and to the occupants of both vehicles in car-to-car collisions.

All available research should be evaluated and further research will be needed to verify and correlate dummy loads and occupant injuries with proposed test configurations and real world accident experience before incorporation of MIV modifications can be justified. The results of this research project as well as those of other projects dealing with passive safety matters demonstrate that single isolated measures, considering all previously described limiting conditions, are not the means to achieve an optimum increase in overall vehicle safety. The "Integrated Structure" with MIV padding of the Research MIV is the only parameter considered in this project.

The results of this project demonstrate that frontal and lateral structure layouts for the striking and struck vehicle may have to be considered in an integrated approach.

Further research is required to develop and match frontal and lateral structures, taking into account the important considerations of vehicle compatibility and a car layout for an economically justified optimum occupant protection.

The highest potential for dummy load reduction in the MIV project lateral impact tests was achieved with "front structure only" modifications of the striking vehicle by simulating the reduction of bumper and longitudinal frame member height.

The joint NHTSA and VW research MIV project is an important step, but only one of many which must be taken in the complex research effort necessary to realize further increases in existing levels of passive safety in real world lateral and frontal collisions.